芯伯乐®
XINBOLE

Product Specification

XBLW 24C256

Two-Wire Serial EEPROM 256K (8-bit wide)

WEB | www.xinboleic.com



Description

The 24C256 series are 262, 144 bits of serial Electrical Erasable and Programmable Read Only Memory, commonly known as EEPROM. They are organized as 32,768 words of 8 bits (one byte) each. The devices are fabricated with proprietary advanced CMOS process for low power and low voltage applications. These devices are available in standard 8-lead DIP, 8-lead SOP, 8-lead MSOP,8-lead TSSOP and 8-lead DFN packages. A standard 2-wire serial interface is used to address all read and write functions. Our extended V_{CC} range (1.8 V to 5.5 V) devices enables wide spectrum of applications.

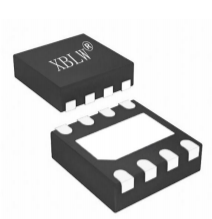
DFN-8

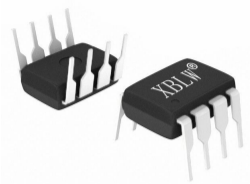
DIP-8

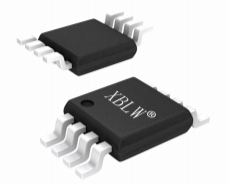
MSOP-8

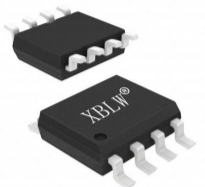
SOP-8

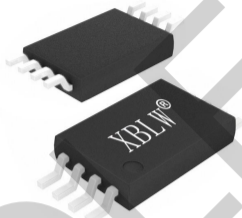
TSSOP-8

Feature

- Low voltage and low power operations:
  - 24C256: VCC = 1.8V to 5.5V
- 64 bytes page write mode.
- Partial page write operation allowed.
- Internally organized: 32,768 ×8 (256K).
- Standard 2-wire bi-directional serial interface.
- Schmitt trigger, filtered inputs for noise protection
- Self-timed write cycle (5ms maximum).
- 1 MHz (2.5V-5.5V), 400 kHz (1.8V) Compatibility.
- Automatic erase before write operation
- Write protect pin for hardware data protection.
- High reliability: typically 1,000,000 cycles endurance.
- 100 years data retention.
- Industrial temperature range (-40°C to 85°C).
- Standard 8-pin DIP/SOP/MSOP/TSSOP/DFN Pb-free packages.

Ordering Information

Product Model	Package Type	Marking	Packing	Packing Qty
XBLW 24C256N	DIP-8	24C256N	Tube	2000Pcs/Box
XBLW 24C24C256BN	SOP-8	24C256BN	Tape	4000Pcs/Reel
XBLW 24C24C256MN	MSOP-8	256MN	Tape	5000Pcs/Reel
XBLW 24C24C256TN	TSSOP-8	256TN	Tape	5000Pcs/Reel
XBLW 24C24C256DN	DFN-8	256D8	Tape	5000Pcs/Reel

XBLW/XINBOLE

PIN CONFIGURATION

Pin Name	Pin Function
A2 , A1, A0	Device Address Inputs
SDA	Serial Data Input / Open Drain Output
SCL	Serial Clock Input
WP	Write Protect
Vcc	Power Supply
GND	Ground
NC	No- Connect

Table 1

8-lead DIP/SOP/MSOP/TSSOP/DFN
(Top View)

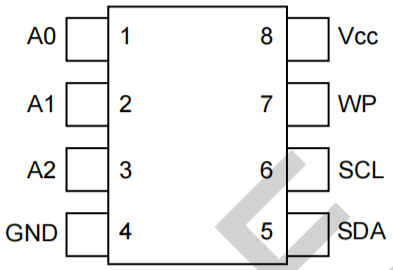

Figure 1: Package types

ABSOLUTE MAXIMUM RATINGS

Parameter	Parameter value	Unit
Industrial operating temperature	-40~+85	℃
Storage temperature	-50~+125	℃
Maximum voltage	8	V
ESD protection on all pins	＞2000	V
Input voltage on any pin relative to ground ： -0.3V to VCC + 0.3V		

* Stresses exceed those listed under "Absolute Maximum Rating"may cause permanent damage to the device.Functional operation of the device at conditions beyond those listed in the specification is not guaranteed.Prolonged exposure to extreme conditions may affect device reliability or functionality.

Block Diagram

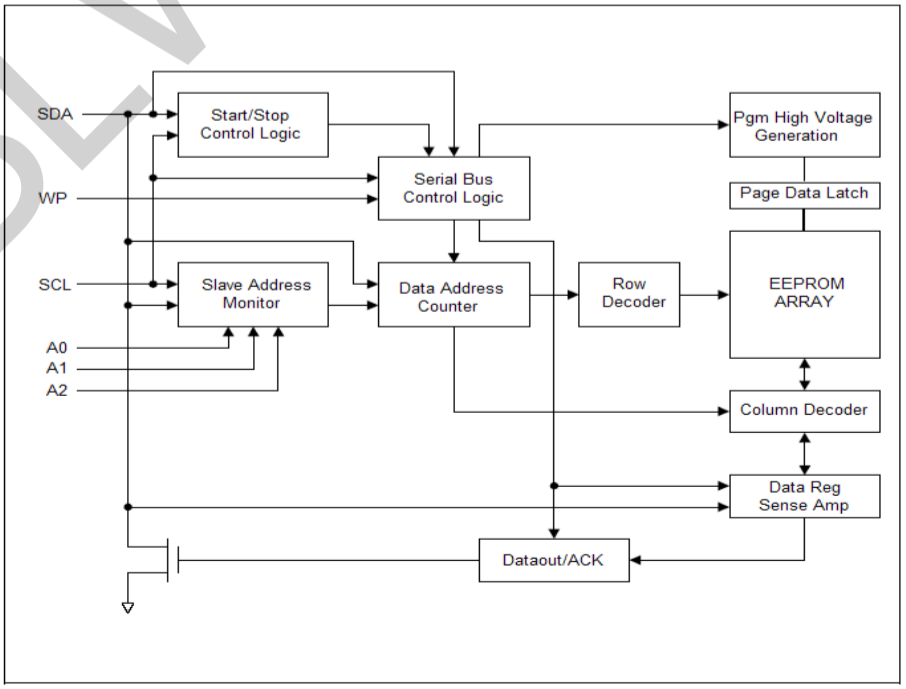

Block Diagram

XBLW/XINBOLE

PIN DESCRIPTIONS

(A) DEVICE / CHIP SELECT ADDRESSES (A2, A1, A0)

These are the chip select input signals for the serial EEPROM devices. Typically, these signals are hardwired to either V_{IH} or V_{IL}. If left unconnected, they are internally recognized as V_{IL}.

(B) SERIAL CLOCK (SCL)

The rising edge of this SCL input is to latch data into the EEPROM device while the falling edge of this clock is to clock data out of the EEPROM device.

(C) SERIAL DATA LINE (SDA)

SDA data line is a bi-directional signal for the serial devices. It is an open drain output signal and can be wired-OR with other open-drain output devices.

(D) WRITE PROTECT (WP)

The 24C256 devices have a WP pin to protect the whole EEPROM array from programming. Programming operations are allowed if WP pin is left un-connected or input to V_{IL}. Conversely all programming functions are disabled if WP pin is connected to V_{IH} or V_{CC}. Read operations is not affected by the WP pin's input level.

MEMORY ORGANIZATION

The 24C256 devices have 512 pages. Since each page has 64 bytes, random word addressing to 24C256 will require 15 bits data word addresses.

DEVICE OPERATION

(A) SERIAL CLOCK AND DATA TRANSITIONS

The SDA pin is typically pulled to high by an external resistor. Data is allowed to change only when Serial clock SCL is at V_{IL}. Any SDA signal transition may interpret as either a START or STOP condition as described below.

(B) START CONDITION

With SCL $\geqslant V_{IH}$, a SDA transition from high to low is interpreted as a START condition. All valid commands must begin with a START condition.

(C) STOP CONDITION

With SCL $\geqslant V_{IH}$, a SDA transition from low to high is interpreted as a STOP condition. All valid read or write commands end with a STOP condition. The device goes into the STANDBY mode if it is after a read command. A STOP condition after page or byte write command will trigger the chip into the STANDBY mode after the self-timed internal programming finish (see Figure 1).

(D) ACKNOWLEDGE

The 2-wire protocol transmits address and data to and from the EEPROM in 8 bit words. The EEPROM acknowledges the data or address by outputting a "0" after receiving each word. The ACKNOWLEDGE signal occurs on the 9th serial clock after each word.

XBLW/XINBOLE

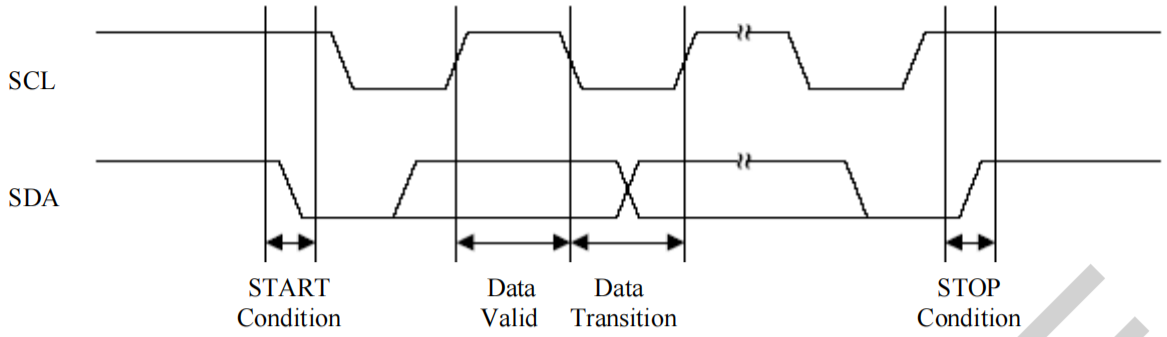

Figure 1: Timing diagram for START and STOP conditions

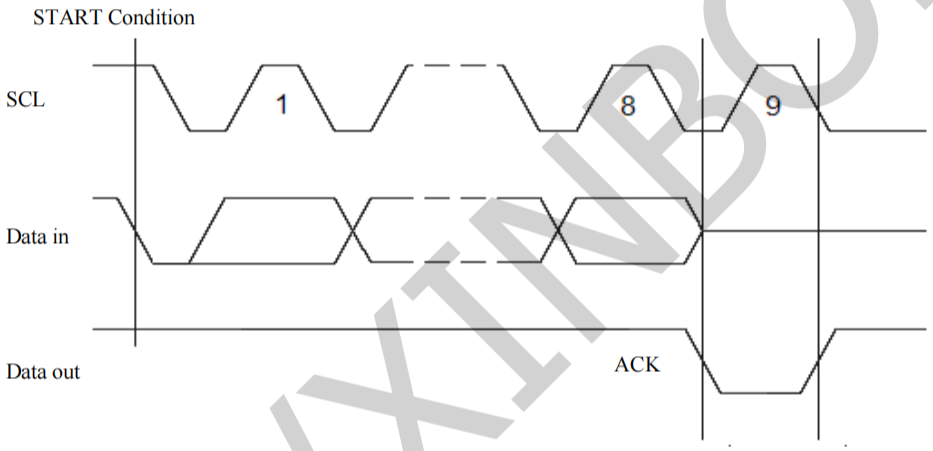

Figure 2: Timing diagram for output ACKNOWLEDGE

Device Addressing

The 2-wire serial bus protocol mandates an 8 bits device address word after a START bit condition to invoke a valid read or write command. The first four most significant bits of the device address must be 10 1 0 , which is common to all serial EEPROM devices. The next three bits are device address bits. These three device address bits (5th , 6th and 7th) are to match with the external chip select/address pin states. If a match is made, the EEPROM device outputs an ACKNOWLEDGE signal after the 8th read/write bit, otherwise the chip will go into STANDBY mode. However, matching may not be needed for some or all device address bits (5th , 6th and 7th) as noted below. The last or 8th bit is a read/write command bit. If the 8th bit is at V_{IH} then the chip goes into read mode. If a "0" is detected, the device enters programming mode.

Write Operations

(A) BYTE WRITE

A write operation requires two 8-bit data word address following the device address word and ACKNOWLEDGE signal. Upon receipt of this address, the EEPROM will respond with a "0" and then clock in the first 8-bit data word. Following receipt of the 8-bit data word, the EEPROM will again output a "0". The addressing device, such as a microcontroller, must terminate the write sequence with a STOP condition. At this time the EEPROM enters into an internally-timed write cycle state. All inputs are disabled during this write cycle and the EEPROM will not respond until the writing is completed (Figure 3).

XBLW/XINBOLE

(B) PAGE WRITE

The 256K EEPROM are capable of 64-byte page write.

A page write is initiated the same way as a byte write, but the microcontroller does not send a STOP condition after the first data word is clocked in. The microcontroller can transmit up to 63 more data words after the EEPROM acknowledges receipt of the first data word. The EEPROM will respond with a "0" after each data word is received. The microcontroller must terminate the page write sequence with a STOP condition (see Figure 4).

The lower six bits of the data word address are internally incremented following the receipt of each data word. The higher data word address bits are not incremented, retaining the memory page row location. If more than 64 data words are transmitted to the EEPROM, the data word address will "roll over" and the previous data will be overwritten.

(C) ACKNOWLEDGE POLLING

ACKNOWLEDGE polling may be used to poll the programming status during a self-timed internal programming. By issuing a valid read or write address command, the EEPROM will not acknowledge at the 9thclock cycle if the device is still in the self-timed programming mode. However, if the programming completes and the chip has returned to the STANDBY mode, the device will return a valid ACKNOWLEDGE signal at the 9th clock cycle.

Read Operations

The read command is similar to the write command except the 8th read/write bit in address word is set to "1". The three read operation modes are described as follows:

(A) CURRENT ADDRESS READ

The EEPROM internal address word counter maintains the last read or write address plus one if the power supply to the device has not been cut off. To initiate a current address read operation, the micro-controller issues a START bit and a valid device address word with the read/write bit (8th) set to "1". The EEPROM will response with an ACKNOWLEDGE signal on the 9th serial clock cycle. An 8-bit data word will then be serially clocked out. The internal address word counter will then automatically increase by one. For current address read the micro-controller will not issue an ACKNOWLEDGE signal on the 18th clock cycle. The micro-controller issues a valid STOP bit after the 18th clock cycle to terminate the read operation. The device then returns to STANDBY mode (see Figure 5).

(B) SEQUENTIAL READ

The sequential read is very similar to current address read. The micro-controller issues a START bit and a valid device address word with read/write bit (8th) set to "1". The EEPROM will response with an ACKNOWLEDGE signal on the 9th serial clock cycle. An 8-bit data word will then be serially clocked out. Meanwhile the internally address word counter will then automatically increase by one. Unlike currentaddress read, the micro-controller sends an ACKNOWLEDGE signal on the 18th clock cycle signaling the EEPROM device that it wants another byte of data. Upon receiving the ACKNOWLEDGE signal, the EEPROM will serially clocked out an 8-bit data word based on the incremented internal address counter. If the micro-controller needs another data, it sends out an ACKNOWLEDGE signal on the 27th clock cycle. Another 8-bit data word will then be serially clocked out. This sequential read continues as long as the micro-controller sends an ACKNOWLEDGE signal after receiving a new data word. When the internal address counter reaches its maximum valid address, it rolls over to the beginning of the memory array address. Similar to current address read, the micro-controller can terminate the sequential read by not acknowledging the last data word received, but sending a STOP bit afterwards instead (figure 6).

(C) RANDOM READ

Random read is a two-steps process. The first step is to initialize the internal address counter with a target read address using a "dummy write" instruction. The second step is a current address read.

To initialize the internal address counter with a target read address, the micro-controller issues a START bit first, follows by a valid device address with the read/write bit (8th) set to "0". The EEPROM will then acknowledge. The micro-controller will then send two address words. Again the EEPROM will acknowledge. Instead of sending a valid written data to the EEPROM, the micro-controller performs a current address read instruction to read the data. Note that once a START bit is issued, the EEPROM will reset the internal programming process and continue to execute the new instruction - which is to read the current address (figure 7).

XBLW/XINBOLE

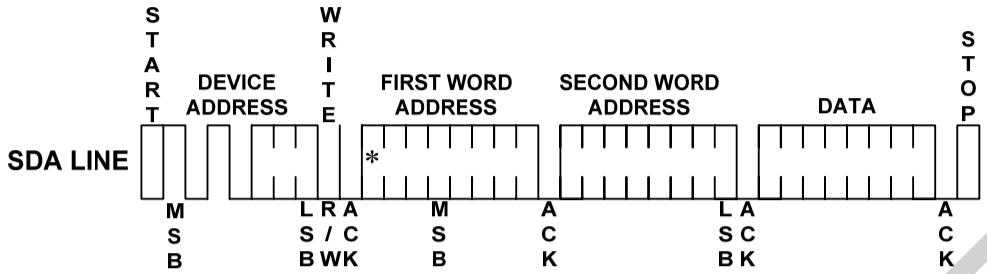

Figure 3: Byte Write

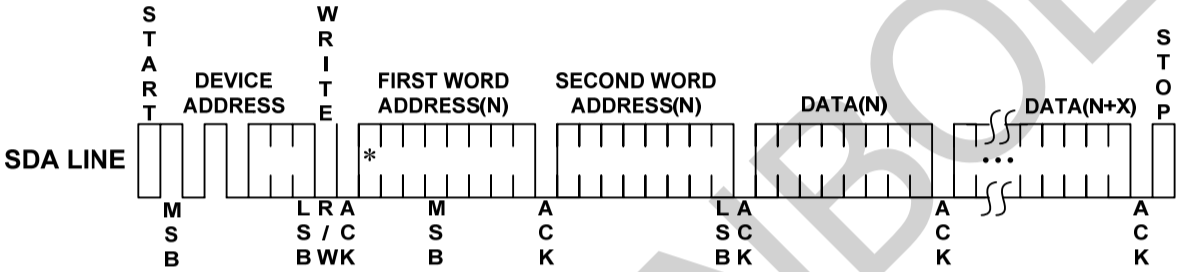

Figure 4: Page Write

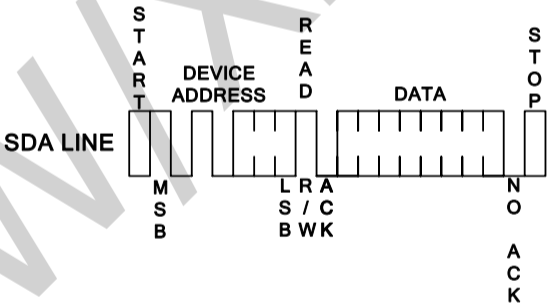

Figure 5: Current Address Read

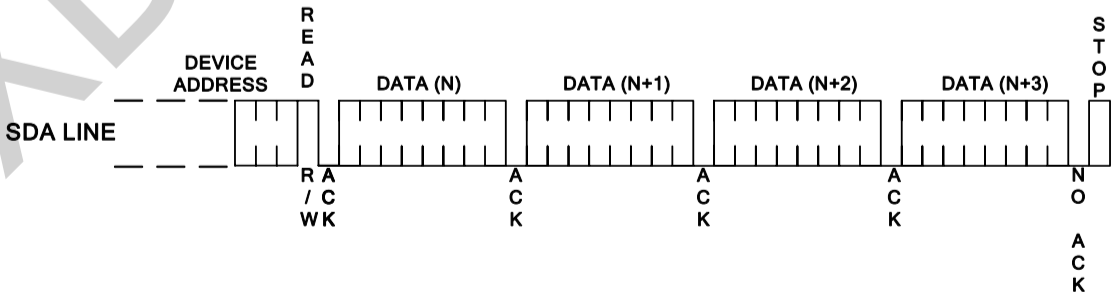

Figure 6: Sequential Read

XBLW XINBOLE

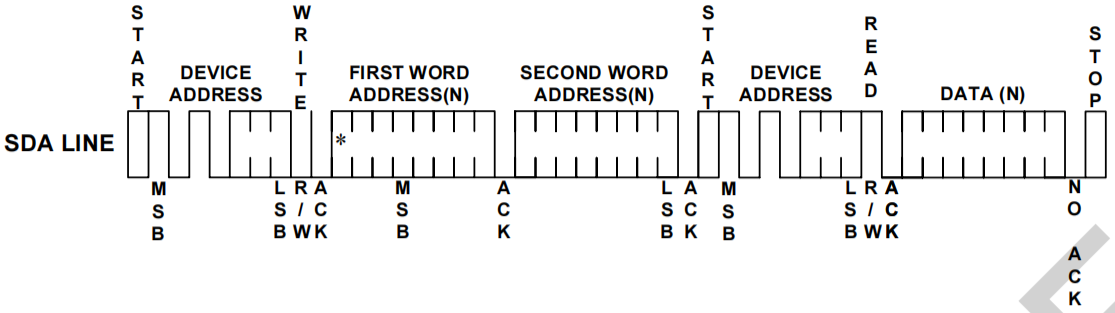

Figure 7: Random Read

Notes: 1) * = Don't Care bits

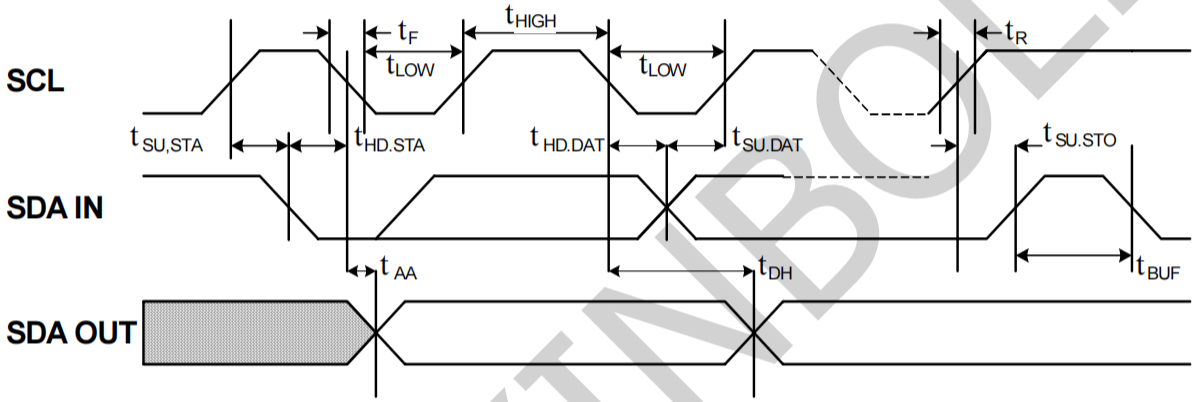

Figure 8: SCL and SDA Bus Timing

Electrical Specifications

(A) Power-Up Requirements

During a power-up sequence, the V_{CC} supplied to the device should monotonically rise from GND to the minimum V_{CC} level, with a slew rate no faster than 0.05 V/ps and no slower then 0.1 V/ms. A decoupling cap should be connected to the V_{CC} PAD which is no smaller than 10nF.

(B) Device Reset

To prevent inadvertent write operations or any other spurious events from occurring during a power- up sequence, this device includes a Power- on Reset (POR) circuit Upon power- up, the device will not respond to any commands until the V_{CC} level crosses the internal voltage threshold (V_{POR}) that brings the device out of Reset and into Standby mode. The system designer must ensure the Instructions are not sent to the device until the V_{CC} supply has reached a stable value greater than or equal to the minimum V_{CC} level.

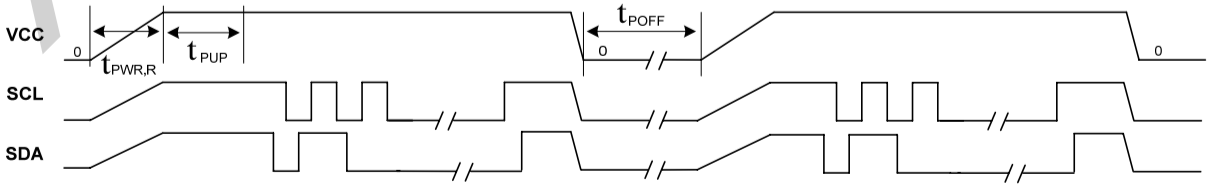

Figure 9: Power on and Power down

If an event occurs in the system where the V_{CC} level supplied to the device drops below the maximum V_{POR} level specified, it is recommended that a full power cycle sequence be performed by first driving the V_{CC} pin to GND, waiting at least the minimum t_{POFF} time and then performing a new power-up sequence in compliance with the requirements defined in this section.

XBLW/XINBOLE

Ac Characteristics

Symbol	Parameter	1.8V		2.5-5.5V		Unit
		Min	Max	Min	Max	
f_{SCL}	Clock frequency, SCL		400		1000	kHz
t_{LOW}	Clock pulse width low	1.3		0.6		μs
t_{HIGH}	Clock pulse width high	0.6		0.3		μs
t_I	Noise suppression time(1)		100		50	ns
t_{AA}	Clock low to data out valid		0.9		0.55	μs
t_{BUF}	Time the bus must be free before a new transmission can start(1)	1.3		0.5		μs
$t_{HD.STA}$	START hold time	0.6		0.25		μs
$t_{SU.STA}$	START set-up time	0.6		0.25		μs
$t_{HD.DAT}$	Data in hold time	0		0		μs
$t_{SU.DAT}$	Data in set-up time	100		100		ns
t_R	Input rise time(1)		0.3		0.3	μs
t_F	Input fall time(1)		300		100	ns
$t_{SU.STO}$	STOP set-up time	0.6		0.25		μs
t_{DH}	Date out hold time	50		50		ns
$t_{PWR,R}$	Vcc slew rate at power up	0.1	50	0.1	50	V/ms
t_{PUP}	Time required after VCC is stable before the device can accept commands	100		100		μs
t_{PORF}	Minimum time at Vcc= 0 V between power cycles	500		500		ms
t_{WR}	Write cycle time		5		5	ms
Endurance	25°C, Page Mode, 3.3V	1,000,000				Write Cycles

Notes: 1. This Parameter is expected by characterization but are not fully screened by test.

2. AC Measurement conditions: R_L (Connects to Vcc): 1.3KQ Input Pulse Voltages: 0.3Vcc to 0.7Vcc Input and output timing reference Voltages: 0.5Vcc

Dc Characteristics

Symbol	Parameter	Test Conditions	Min	Typical	Max	Units
V_{CC1}	Supply V_{CC}		1.8		5.5	V
I_{CC1}	Supply read current	V_{CC} @ 5.5V SCL = 100 kHz		0.4	1.0	mA
I_{CC2}	Supply write current	V_{CC} @ 5.5V SCL = 100 kHz		2.0	3.0	mA
I_{SB1}	Supply current	V_{CC} @ 1.8V, V_{IN} = V_{CC} or V_{SS}		< 1.0		μA
I_{SB2}	Supply current	V_{CC} @ 2.5V, V_{IN} = V_{CC} or V_{SS}		< 1.0		μA
I_{SB3}	Supply current	V_{CC} @ 5.5V, V_{IN} = V_{CC} or V_{SS}		< 1.0		μA
I_{IL}	Input leakage current	V_{IN} = V_{CC} or V_{SS}			3.0	μA
I_{LO}	Output leakage current	V_{IN} = V_{CC} or V_{SS}			3.0	μA
V_{IL}	Input low level		-0.6		V_{CC} ×0.3	V
V_{IH}	Input high level		V_{CC} × 0.7		V_{CC} + 0.5	V
V_{OL1}	Output low level	V_{CC} @ 1.8V, I_{OL} = 0.15 mA			0.4	V
V_{OL2}	Output low level	V_{CC} @ 3.0V, I_{OL} = 2.1 mA			0.4	V

XBLW/XINBOLE

Package Information

- DIP-8

Size / Symbol	Dimensions In Millimeters		Size / Symbol	Dimensions In Inches	
	Min(mm)	Max(mm)		Min(in)	Max(in)
A	3.710	4.310	A	0.146	0.170
A1	0.510		A1	0.020	
A2	3.200	3.600	A2	0.126	0.142
B	0.380	0.570	B	0.015	0.022
B1	1.524(BSC)		B1	0.060(BSC)	
C	0.204	0.360	C	0.008	0.014
D	9.000	9.400	D	0.354	0.370
E	6.200	6.600	E	0.244	0.260
E1	7.320	7.920	E1	0.288	0.312
e	2.540(BSC)		e	0.100(BSC)	
L	3.000	3.600	L	0.118	0.142
E2	8.400	9.000	E2	0.331	0.354

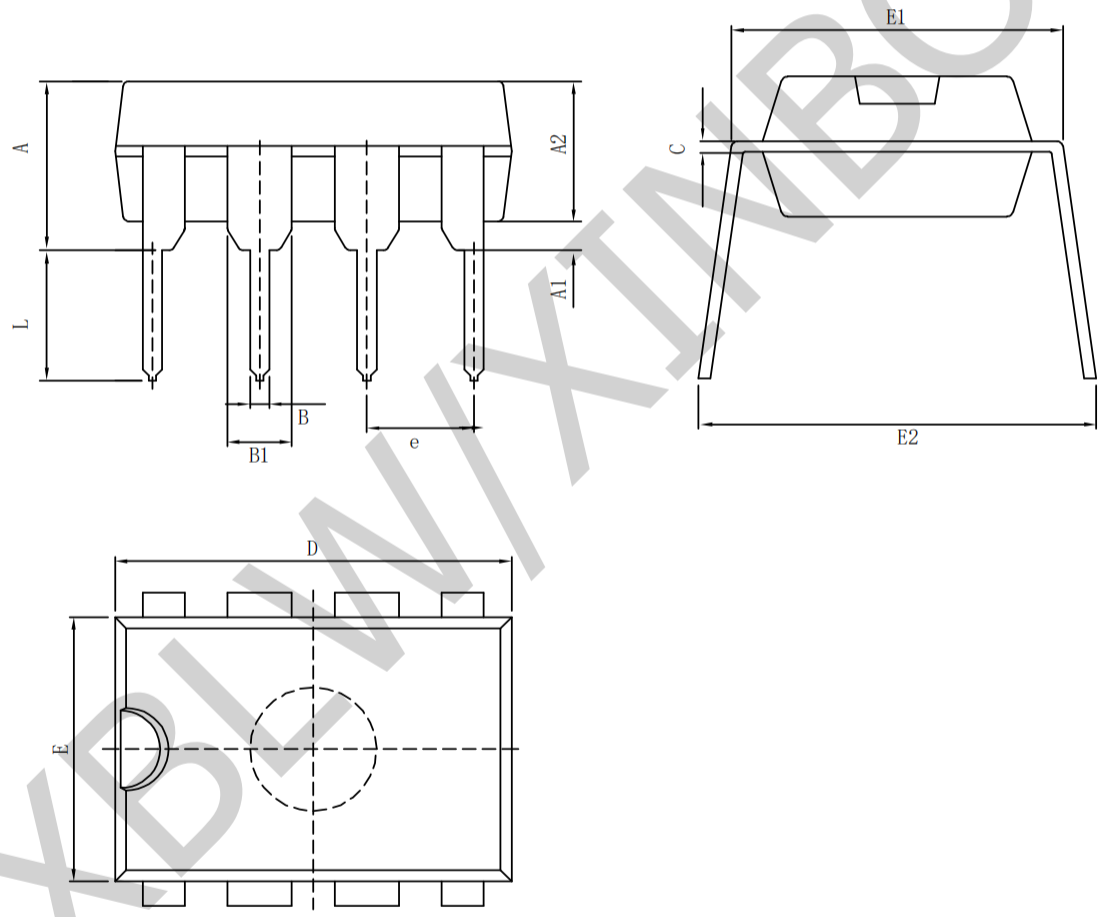

XBLW/XINBOLE

- SOP-8

Size / Symbol	Dimensions In Millimeters		Size / Symbol	Dimensions In Inches	
	Min(mm)	Max(mm)		Min(in)	Max(in)
A	1.350	1.750	A	0.053	0.069
A1	0.100	0.250	A1	0.004	0.010
A2	1.350	1.550	A2	0.053	0.061
b	0.330	0.510	b	0.013	0.020
c	0.170	0.250	c	0.006	0.010
D	4.700	5.100	D	0.185	0.200
E	3.800	4.000	E	0.150	0.157
E1	5.800	6.200	E1	0.228	0.224
e	1.270(BSC)		e	0.050(BSC)	
L	0.400	1.270	L	0.016	0.050
θ	0°	8°	θ	0°	8°

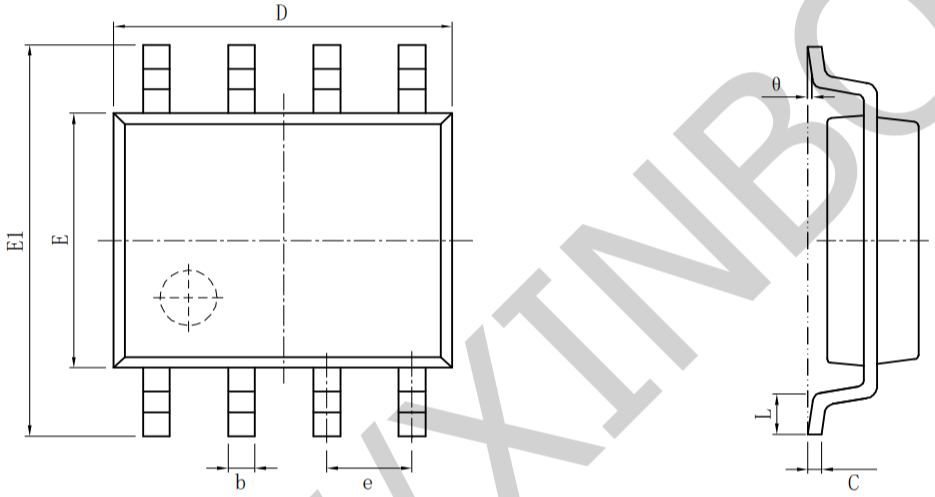

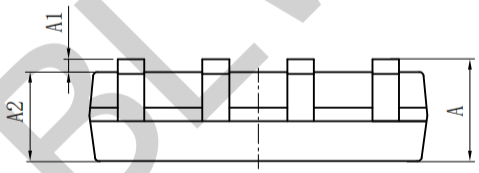

XBLW/XINBOLE

· MSOP-8

Size / Symbol	Dimensions In Millimeters		Size / Symbol	Dimensions In Inches	
	Min(mm)	Max(mm)		Min(in)	Max(in)
A	0.820	1.100	A	0.320	0.043
A1	0.020	0.150	A1	0.001	0.006
A2	0.750	0.950	A2	0.030	0.037
b	0.250	0.380	b	0.010	0.015
c	0.090	0.230	c	0.004	0.009
D	2.900	3.100	D	0.114	0.122
e	0.65 (BSC)		e	0.026(BSC)	
E	2.900	3.100	E	0.114	0.122
E1	4.750	5.050	E1	0.187	0.199
L	0.400	0.800	L	0.016	0.031
θ	0°	6°	θ	0°	6°

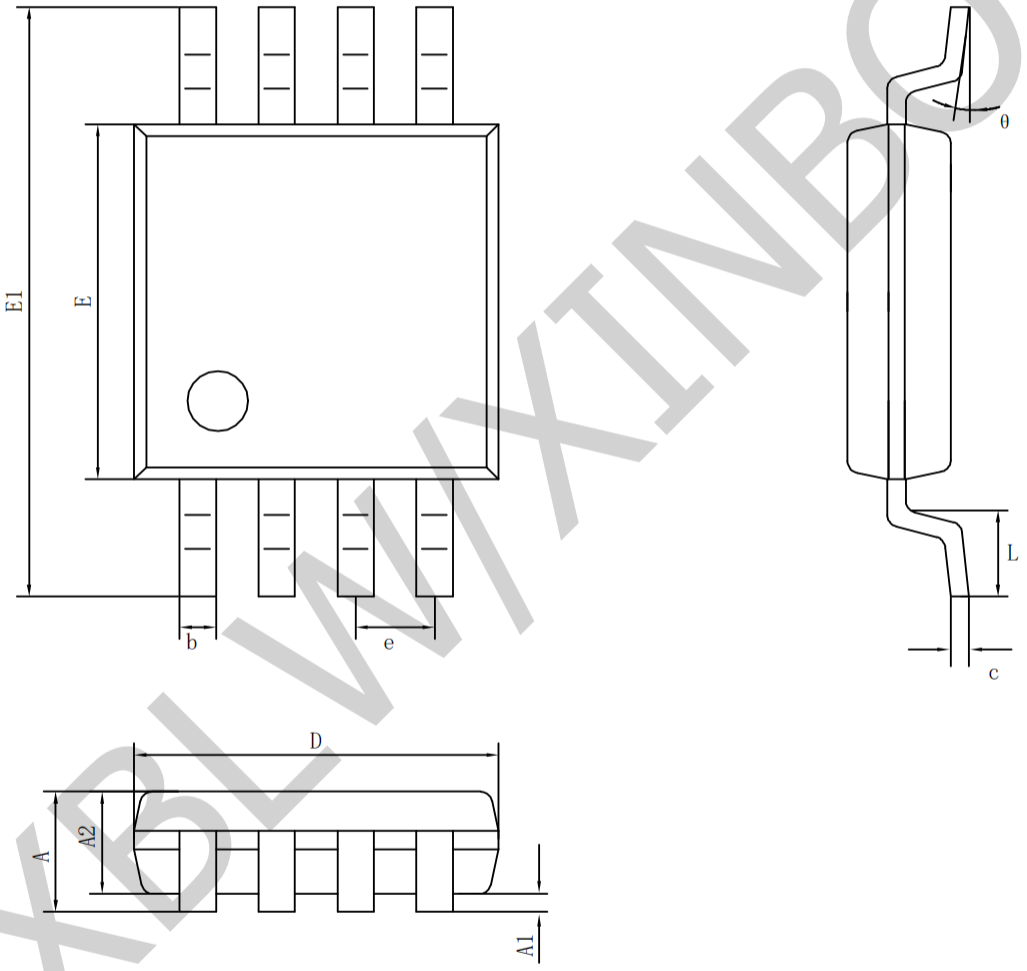

XBLW/XINBOLE

· TSSOP-8

Size / Symbol	Dimensions In Millimeters		Size / Symbol	Dimensions In Inches	
	Min(mm)	Max(mm)		Min(in)	Max(in)
D	2.900	3.100	D	0.114	0.122
E	4.300	4.500	E	0.169	0.177
b	0.190	0.300	b	0.007	0.012
c	0.090	0.200	c	0.004	0.008
E1	6.250	6.550	E1	0.246	0.258
A		1.100	A		0.043
A2	0.800	1.000	A2	0.031	0.039
A1	0.020	0.150	A1	0.001	0.006
e	0.65(BSC)		e	0.026(BSC)	
L	0.500	0.700	L	0.020	0.028
H	0.25(TYP)		H	0.01(TYP)	
θ	1°	7°	θ	1°	7°

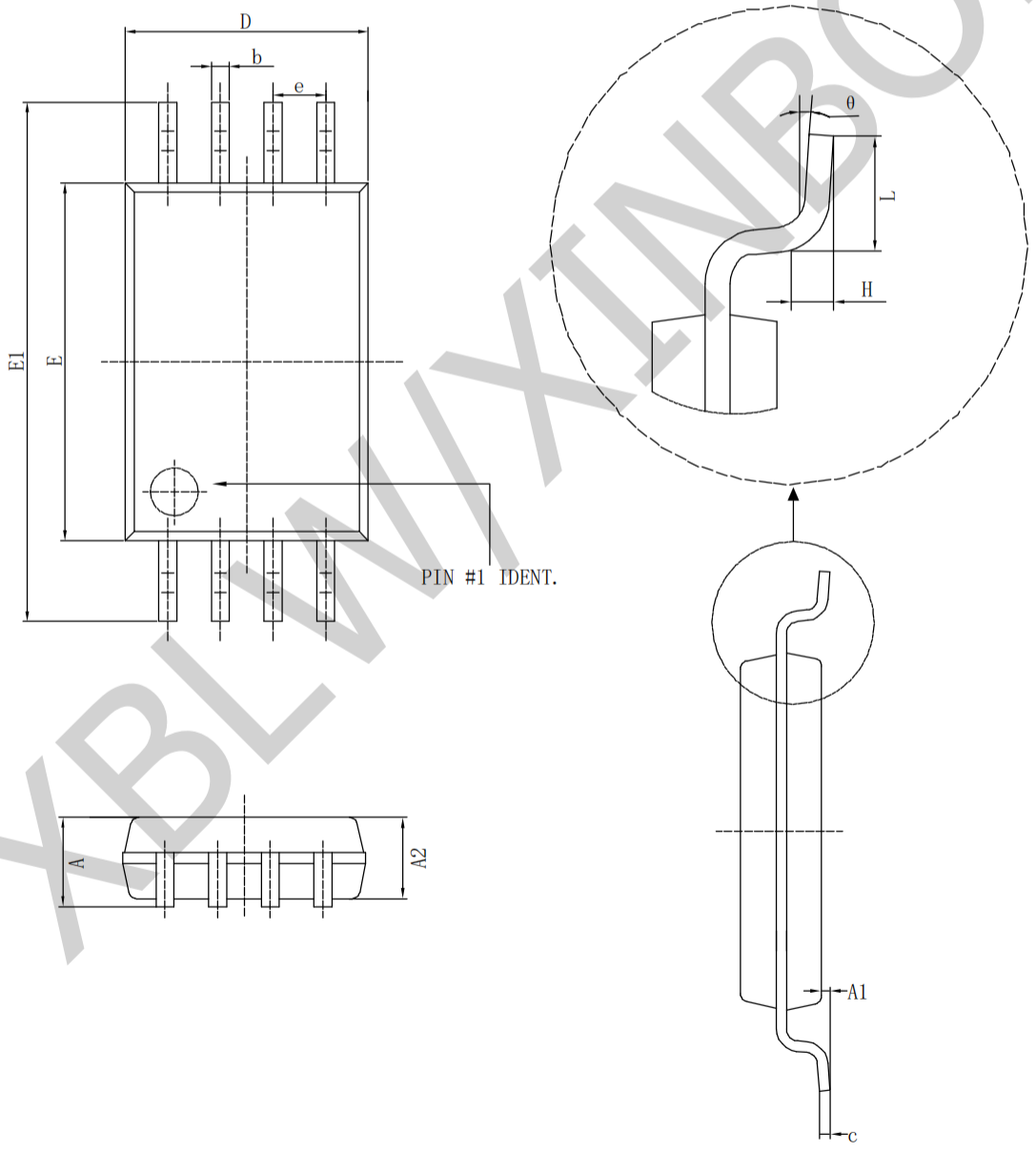

XBLW/XINBOLE

· DFN-8

Size / Symbol	Dimensions In Millimeters		Size / Symbol	Dimensions In Inches	
	Min(mm)	Max(mm)		Min(in)	Max(in)
A	0.450	0.550	A	0.017	0.021
A1	0.000	0.050	A1	0.000	0.002
b	0.180	0.300	b	0.007	0.039
b1	0.160(REF)		b1	0.006(REF)	
c	0.100	0.200	c	0.004	0.008
D	1.900	2.100	D	0.075	0.083
D2	1.400	1.600	D2	0.055	0.062
e	0.500(BSC)		e	0.020(BSC)	
Nd	1.500(BSC)		Nd	0.059(BSC)	
E	2.900	3.100	E	0.114	0.122
E2	1.500	1.700	E2	0.059	0.067
L	0.300	0.500	L	0.012	0.020
h	0.200	0.300	h	0.066	0.120

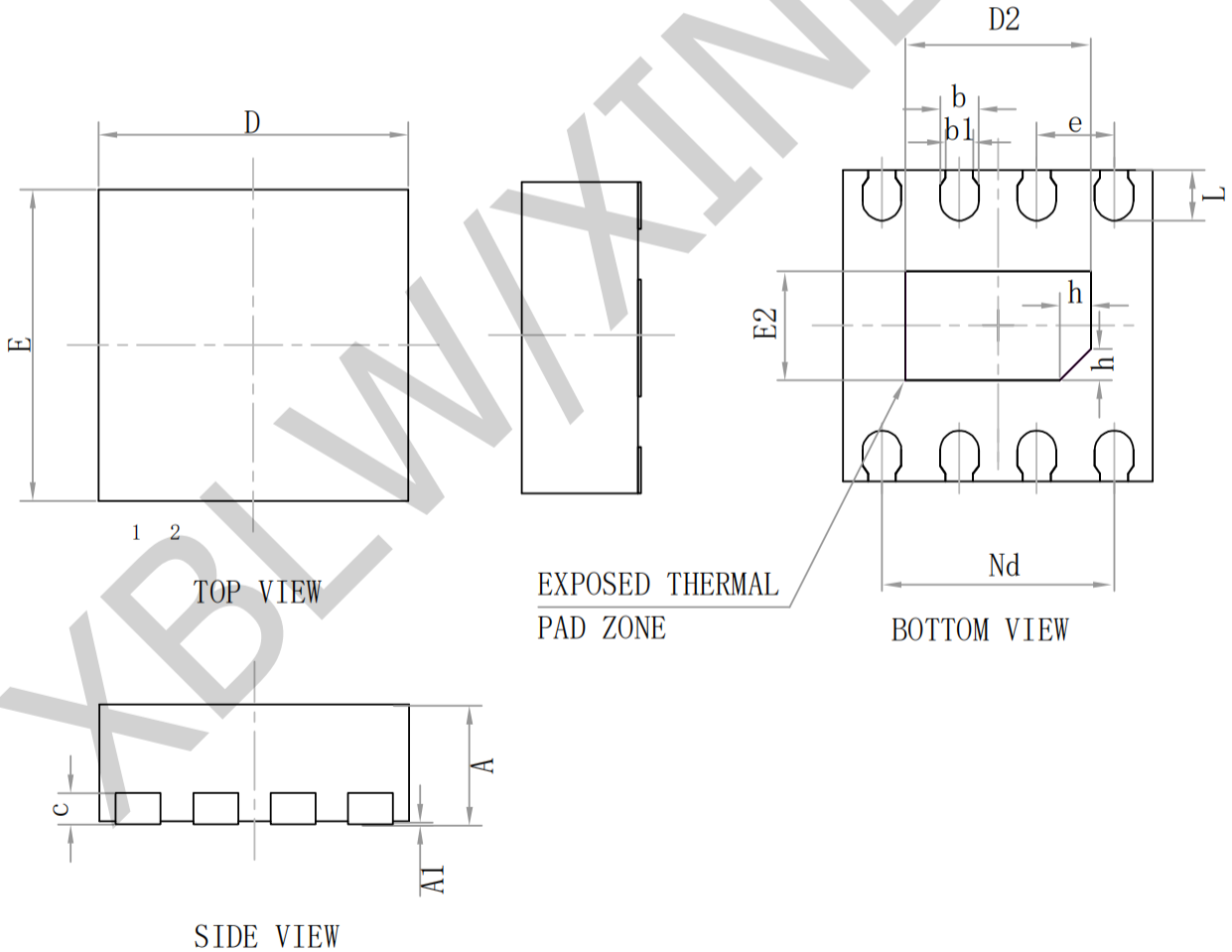

XBLW/XINBOLE

Statement:

- XBLW reserves the right to modify the product manual without prior notice! Before placing an order, customers need to confirm whether the obtained information is the latest version and verify the completeness of the relevant information.
- Any semi-guide product is subject to failure or malfunction under specified conditions. It is the buyer's responsibility to comply with safety standards when using XBLW products for system design and whole machine manufacturing. And take the appropriate safety measures to avoid the potential in the risk of loss of personal injury or loss of property situation!
- XBLW products have not been licensed for life support, military, and aerospace applications, and therefore XBLW is not responsible for any consequences arising from the use of this product in these areas.
- If any or all XBLW products (including technical data, services) described or contained in this document are subject to any applicable local export control laws and regulations, they may not be exported without an export license from the relevant authorities in accordance with such laws.
- The specifications of any and all XBLW products described or contained in this document specify the performance, characteristics, and functionality of said products in their standalone state, but do not guarantee the performance, characteristics, and functionality of said products installed in Customer's products or equipment. In order to verify symptoms and conditions that cannot be evaluated in a standalone device, the Customer should ultimately evaluate and test the device installed in the Customer's product device.
- XBLW documentation is only allowed to be copied without any alteration of the content and with the relevant authorization. XBLW assumes no responsibility or liability for altered documents.
- XBLW is committed to becoming the preferred semiconductor brand for customers, and XBLW will strive to provide customers with better performance and better quality products.

XBLW/XINBOLE