芯伯乐®
XINBOLE

Product Specification

XBLW BISS0001

Micro Power PIR Motion Detector

WEB | www.xinboleic.com



Descriptions

BISS0001 is a special integrated circuit designed for all kinds of sensors, manufactured by precision process. Its external components are greatly reduced, saving space and cost and debugging time, which can improve the reliability of the whole machine. It can be widely used in lighting control, motor and solenoid valve control, anti-theft alarm and other fields.

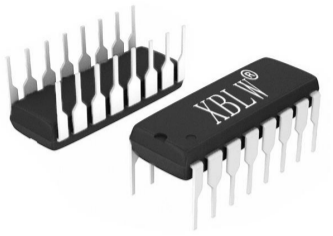

DIP-16

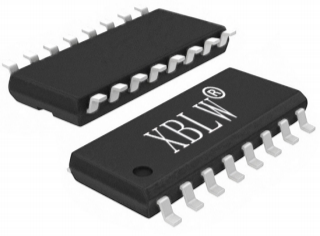

SOP-16

Feature

- Digital-Analog Hybrid Asic
- With An Independent High Input Impedance Operational Amplifier, It Can Be Matched With a Variety Of Sensors For Signal Preprocessing
- Bidirectional Amplitude Discriminator Can Effectively Suppress Interference
- With Delay Time Timer And Block Time Timer, The Structure Is Novel, Stable And Reliable, And The Adjustment Range Is Wide
- Built-In Reference Power Supply
- Wide Operating Voltage Limit Range：2.0V~9V
- Using DIP16 and SOP16 packaging.

Applications

- Accesscontrolsystem
- Toys
- Human body induction lighting
- Other sensor signal processing

XBLW/XINBOLE

Ordering Information

Product Model	Package Type	Marking	Packing	Packing Qty
XBLW BISS0001N	DIP-16	BISS0001N	Tube	1000Pcs/Box
XBLW BISS0001DTR	SOP-16	BISS0001	Tape	2500Pcs/Reel

Schematic Diagram

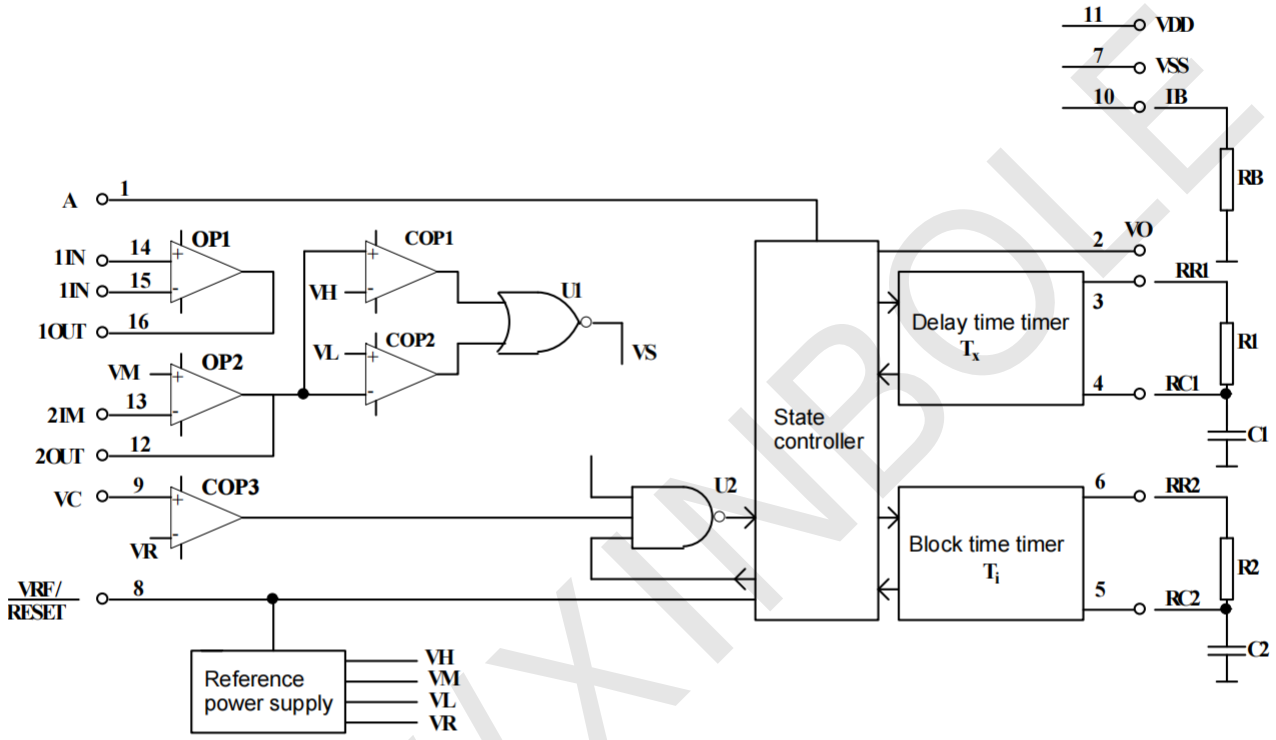

Fig. 1 Schematic Diagram

Operation Instruction

Figure 1 shows the block diagram of the BISS0001 IR Sensor Signal Processor. The external components are selected by the user as required. From the figure, it can be seen that the BISS0001 is a mixed digital-analog special-purpose integrated circuit composed of operational amplifiers, voltage comparators and state controllers, delay time timers, blocking time timers and reference voltage sources. It can be widely used in many kinds of sensors and delay controllers

XBLW/XINBOLE

Pins Configuration

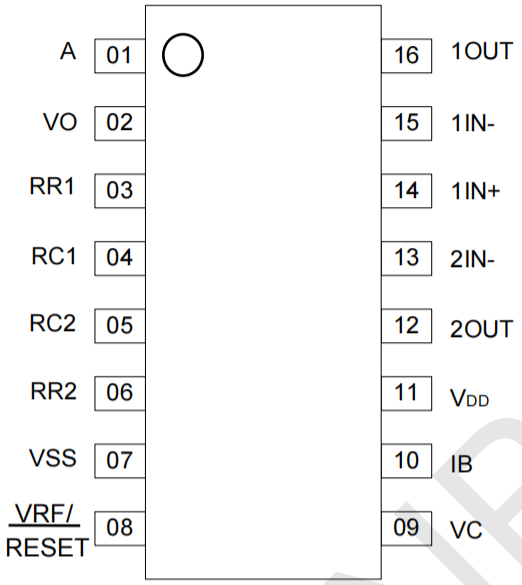

Fig. 2 Pins Configuration

The definition and function of each pin is as follows:

PinNo.	Symbol	Function
1	A	Repeatable and non-repeatable trigger terminal. When A="1", repeat trigger is allowed, when A="0". When A="0",no repeatable trigger is allowed.
2	VO	Control signal output terminal is triggered by the up jump edge of V_5, which causes V_O to jump from low level to high level, which is an effective trigger At the output delay time T_X and when there is no transition on V_5, V_O is in a low-level state.
3，4	RR1，RC1	Adjusts the output delay time T_X, $T_X \approx 49152R_1C_1$
5，6	RR2，RC2	Adjusts the trigger blocking time T_I. $T_I \approx 48R_2C_2$.
7	VSS	Negative side of the operating power supply. Generally connected to 0V.
8	$\overline{\text{VRF/RESET}}$	Reference voltage and reset input. Generally connected to V_{DD}, when connected to "0", timer reset can be used.
9	VC	Trigger disable. Trigger is disabled when $V_C < V_R$; trigger is allowed when $V_C > V_R$. $V_R \approx 0.2V_{DD}$.
10	IB	Operational amplifier bias current setting terminal. It is connected to VSS via RB, and the value of RB is about 1.5MΩ.
11	V_{DD}	Positive side of the operating power supply. The range is 2.6V ~ 6V.
12	2OUT	Output of the second stage op amp.
13	2IN-	Inverting input of the second stage op amp.
14	1IN+	In-phase input of the first stage op amp.
15	1IN-	Inverting input of the first stage op amp.
16	1OUT	Output of the first stage op-amp.

XBLW XINBOLE

Electrical Parameter

Absolute Maximum Ratings

Parameter	Symbol	Value	Unit
Input voltage range	V_{SS}	-0.5 ~ 9	V
Maximum current at each lead	I_{MAX}	±10	mA
Storage temperature	T_{stg}	60 ~ 150	°C
Welding temperature	T_H	260	℃, 10s

Recommended Operating Conditions

Parameter	Symbol	Value	Unit
Supply voltage	V_{DD}	2.6~ 6	V
Operating Temperature	T_A	-10~70	°C

Electrical Characteristics

Ta =25℃

Symbol	Parameter	Test Conditions		Value		Unit
				Min.	Max.	
V_{DD}	Supply Voltage	--		2.6	6.0	V
I_{DD}	Supply Current	No load	V_{DD}=3V		50	uA
			V_{DD}=5V		100	
V_{OS}	Output Offset Voltage	V_{DD}=5V			50	mV
I_{OS}	Input Offset Current	V_{DD}=5V			50	nA
A_{VN}	Open Loop Voltage Gain	V_{DD}=5V R_L= 1.5MΩ		60		dB
CMRR	Common Mode Rejection Ratio	V_{DD}=5V R_L= 1.5MΩ		60		dB
V_{YH}	Output Voltage High	V_{DD}=5V R_L=500KΩ to 1/2V_{DD}		4.25		V
V_{YL}	Output Voltage Low				0.75	V
V_{KH}	Input Vc Voltage High	V_{RF}=V_{DD}=5V		1.1		V
V_{RL}	Input Vc Voltage Low				0.9	V
V_{OH}	Output Vo Voltage High	V_{DD}=5V I_{OH}=0.5mA		4		V
V_{OL}	Output Vo Voltage Low	V_{DD}=5V I_{OL}=0. 1mA			0.4	V
V_{AH}	Input A Voltage High	V_{DD}=5V		3.5		V
V_{AL}	Input A Voltage Low	V_{DD}=5V			1.5	V

XBLW/XINBOLE

Let's illustrate the working process of BISS0001 with the waveforms of each point under the non-repeatable triggering mode as shown in Fig. 3.

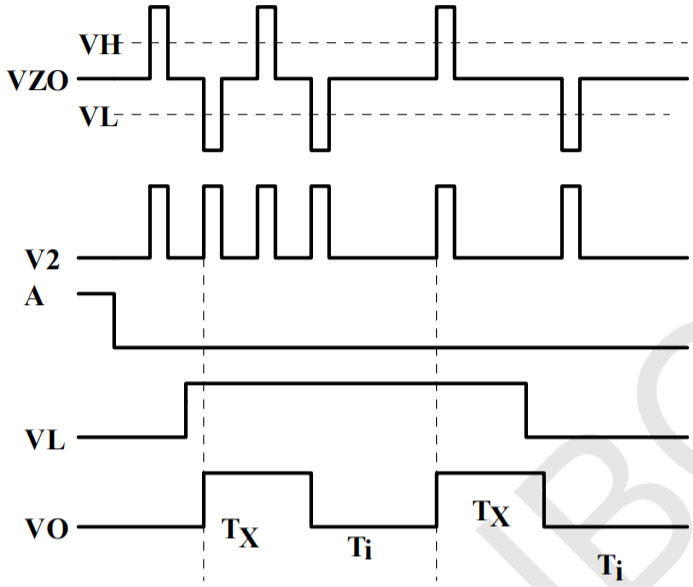

Fig. 3 The waveform of each point in the non repeatable triggering working mode

Firstly, according to the actual needs of the user, the operational amplifier OP1 is used to form a sensing signal pre-processing circuit to amplify the signal. The signal is then synthesized into operational amplifier OP2, and then amplified in the second stage, and at the same time, the DC level is raised to VM (≈ 0.5VDD), and then sent to the bi-directional amplitude-discriminator composed of comparators COP1 and COP2 to detect the effective trigger signal VS. Since VH ≈ 0.7VDD and VL ≈ 0.3>DD, when VDD = 5V, the noise interference of ±1V can be effectively suppressed to improve the reliability of the system.COP1 is a conditional comparator. When the input voltage VC < VR (≈ 0.2VDD), COP1 output is low and seals the gate U2, prohibiting the trigger signal VS from passing to the lower stage; when VC > VR, COP1 output is high and opens the gate U2, and then if the upward jumping edge of the trigger signal VS arrives, the delay time timer can be activated, and at the same time, the output of the VS terminal is high and enters the delay cycle. When terminal A is connected to "0" level, any change of V2 during TX time will be ignored until the end of TX time, which is the so-called non-repeatable triggering mode of operation. At the end of TX time, V2 jumps back to low level, and at the same time starts the blocking time timer and enters the blocking cycle Ti. During the Ti period, any change of V2 cannot make VO active. The setting of this function can effectively inhibit all kinds of disturbances generated during the load switching process.

XBLW XINBOLE

The waveforms of each point in the repeatable trigger mode shown in Figure 4 are used to illustrate the operation of the BISS0001 in this state.

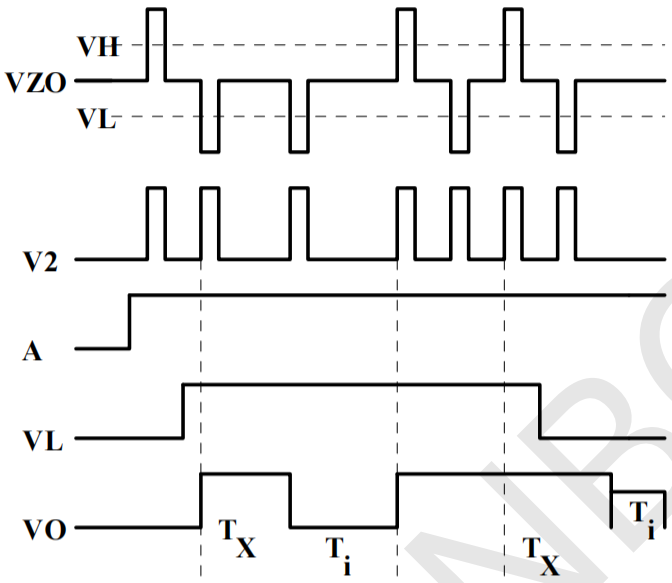

Fig. 4 The waveform of each point under the repeatable triggering working mode

During VC = "0", A = "0", V5 cannot trigger V0 to be active. During VC = "1", A = "1", V5 can repeatedly trigger VO to be active and remain active for the duration of the TX cycle. During the TX time, as long as there is an up-trigger of V5, VO will continue to be extended one more time from the moment of up-trigger of V5 to the moment of up-trigger of V5. During TX time, as long as there is an up-trigger of V5, VO will continue to extend one TX cycle from the moment of up-trigger of V5.1 If VS stays at "1", VO will remain in valid state; if V5 stays at "0", VO will return to invalid state at the end of TX cycle and any change of VS will not be allowed to trigger VO in the blocking time, TI, within the blocking time. During the blocking time TI, any change of VS can not trigger VO to be valid state.
Through the above analysis, we have a comprehensive understanding of the circuit structure and working process of BISS0001, and we can see that the device has a novel structural design and strong functions, which can be applied in a wide range of fields.

XBLW/XINBOLE

Application Diagram

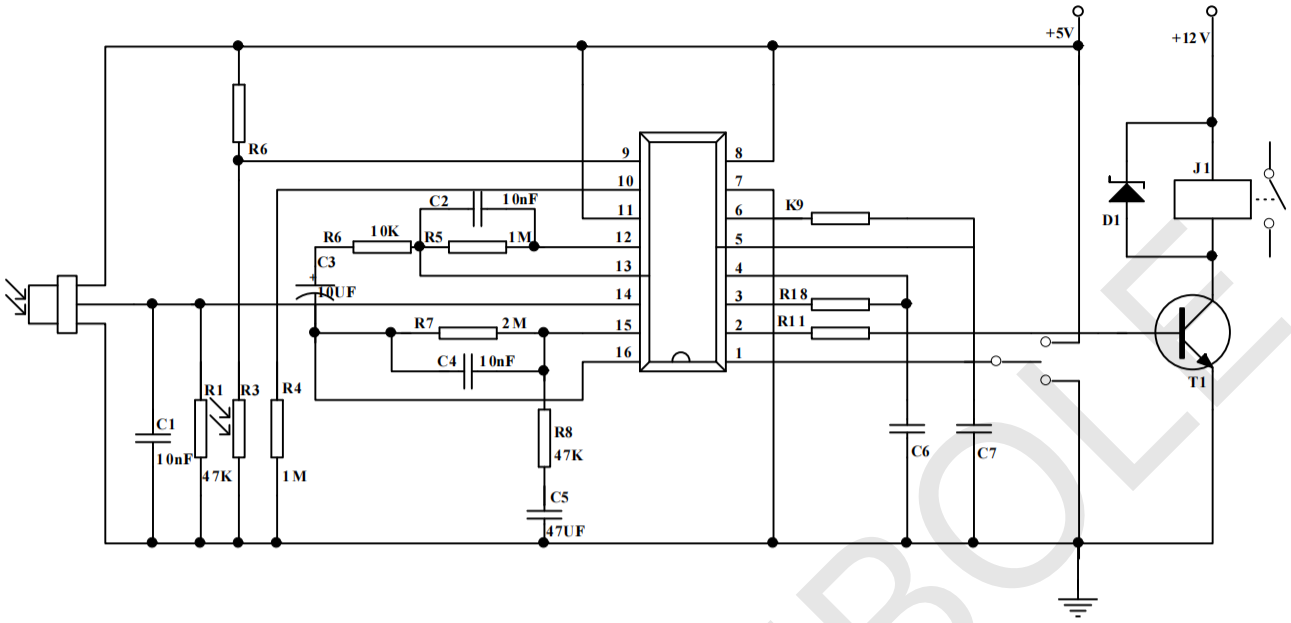

Fig. 5 Schematic diagram of pyroelectric infrared switch circuit

BISS0001 pyroelectric infrared switch is a passive infrared switch with pyroelectric infrared sensor and a few external components. It can automatically and quickly turn on all kinds of incandescent lamps, fluorescent lamps, buzzers, automatic doors, electric fans, dryers and automatic sinks and other devices, is a kind of high-tech products. Especially suitable for enterprises, hotels, shopping malls, warehouses and family aisles, corridors and other sensitive areas, or for security areas of automatic lighting, lighting and alarm systems.

Pyroelectric infrared sensor is a new type of sensitive components, it is made of high thermoelectric coefficient material, with filter lenses and impedance matching with field effect tube composition. It can detect infrared radiation from the human body in a non-contact way, and convert it into an electrical signal output, and can effectively inhibit the human body radiation wavelength outside the interference radiation. Such as sunlight, light and its reflective lamps.

In this example, the operational amplifier OP1 of the BISS0001 is used as the pre-amplifier of the pyroelectric infrared sensor, and is coupled by C3 to the operational amplifier OP2 for the second stage of amplification. After being processed by the bi-directional amplitude discriminator composed of voltage comparators COP1 and COP2, a valid trigger signal is detected to start the delay timer. The output signal is driven by transistor T1 and relay to turn on the load, and R3 is a photoresistor to detect the ambient lighting level. R3 is a photosensitive resistor used to detect the ambient lighting level. When used for lighting control, if the environment is brighter, the resistance value of R3 will be lowered so that the input of pin 9 will be low and the trigger signal will be blocked, thus saving electricity for lighting. If used for other applications, it can be covered by a light shield without being affected by the environment. SW1 is the working mode selector switch, when SW1 is connected to terminal 1, the IR switch is in repeatable trigger mode; when SW1 is connected to terminal 2, the IR switch is in non-repeatable trigger mode.

BISS0001 Application Notices

1, VREF is for Power ON Reset, also when the PIR window reference potential, VREF pin series RREF resistance to VDD, the larger the resistance value, the smaller the window will make the PIR sense more sensitive. (Note: RREF ≦ 100K Ω , CREF ≧ 0.1uF)
2, VC is low when it is daytime, if it is VC pin and connect capacitor to ground, can let IC in Power ON, produce time difference, can let IC judgment for daytime, no output.
3, circuit description.

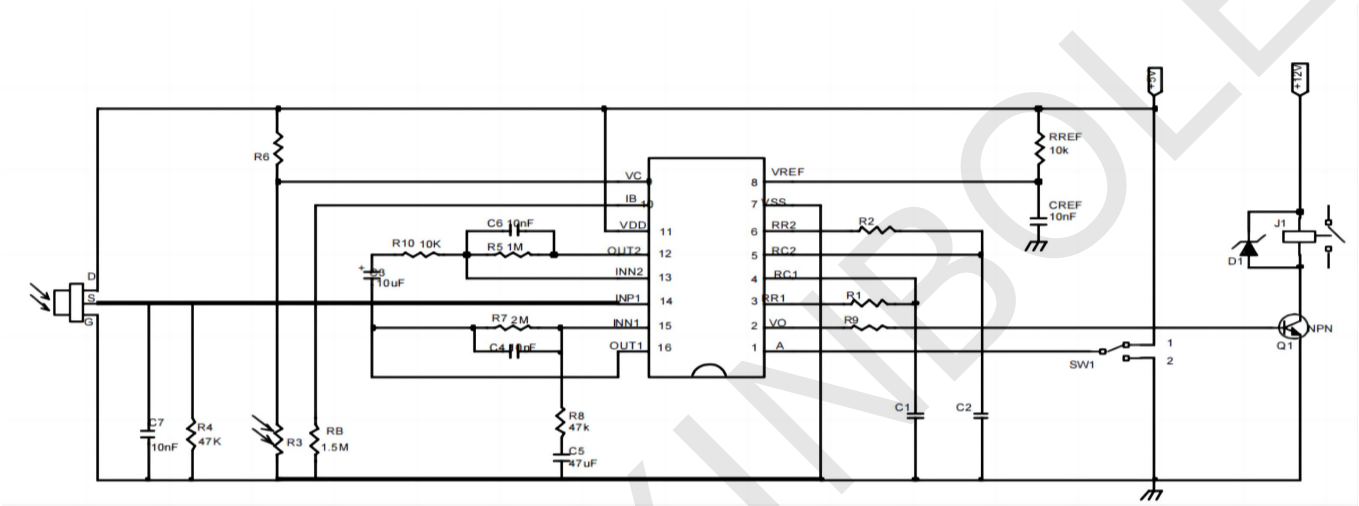

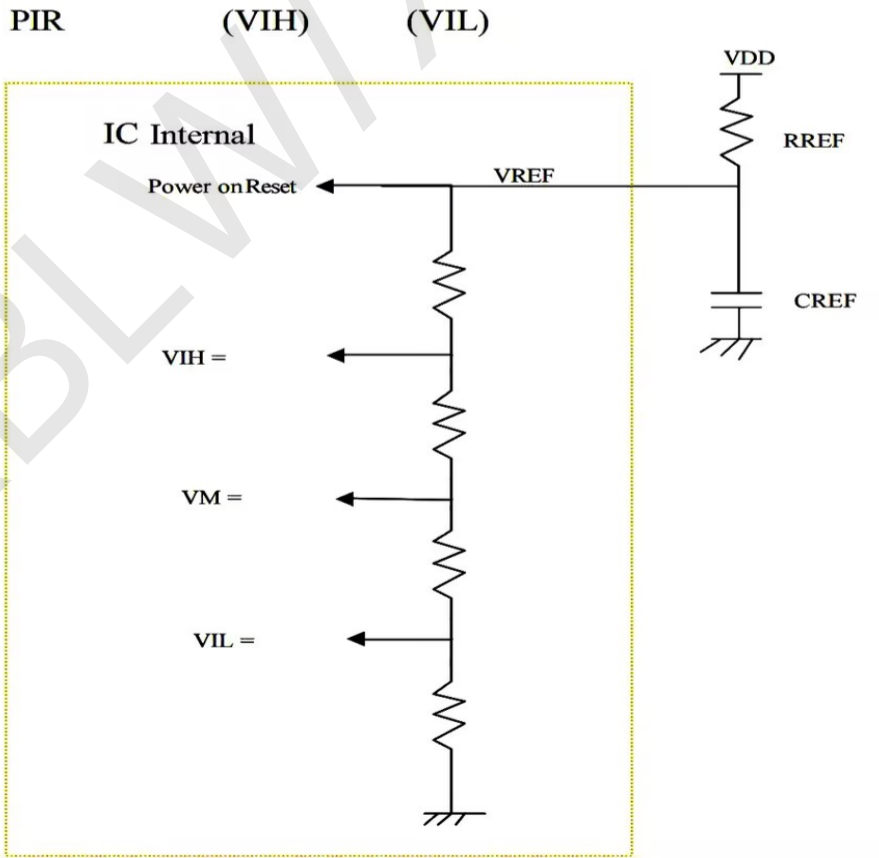

XBLW XINBOLE

4. VREF =VDD=5.0V (RREF=0Ω)

RREF= 100KΩ

VIH	0.7VDD	3.5V
VM	0.5VDD	2.5V
VIL	0.3VDD	1.5V
PIR	±0.2VDD	±1V

Example:VDD=5.0V,

	Min. (V)	Typ. (V)	Max. (V)
VREF	4.475	4.646	4.733
VIH	3.133	3.252	3.313
VM	2.238	2.323	2.367
VIL	1.343	1.394	1.420
PIR	±0.895	±0.929	±0.947
IC inaccuracy ≒ 52mV @25℃			

5. VREF =VDD=3.0V (RREF=0Ω) RREF= 100KΩ

VIH	0.7VDD	2.1V
VM	0.5VDD	1.5V
VIL	0.3VDD	0.9V
PIR	±0.2VDD	±0.6V

Example:VDD=3.0V,

	Min. (V)	Typ. (V)	Max. (V)
VREF	2.678	2.782	2.836
VIH	1.875	1.947	1.985
VM	1.339	1.391	1.418
VIL	0.803	0.835	0.851
GATE	±0.536	±0.556	±0.567
IC inaccuracy ≒ 31mV @25℃			

XBLW/XINBOLE

Package Information

· DIP-16

Size / Symbol	Dimensions In Millimeters		Size / Symbol	Dimensions In Inches	
	Min(mm)	Max(mm)		Min(in)	Max(in)
A	3.710	4.310	A	0.146	0.170
A1	0.510		A1	0.020	
A2	3.200	3.600	A2	0.126	0.142
B	0.380	0.570	B	0.015	0.022
B1	1.524(BSC)		B1	0.060(BSC)	
C	0.204	0.360	C	0.008	0.014
D	18.80	19.20	D	0.740	0.756
E	6.200	6.600	E	0.244	0.260
E1	7.320	7.920	E1	0.288	0.312
e	2.540(BSC)		e	0.100(BSC)	
L	3.000	3.600	L	0.118	0.142
E2	8.400	9.000	E2	0.331	0.354

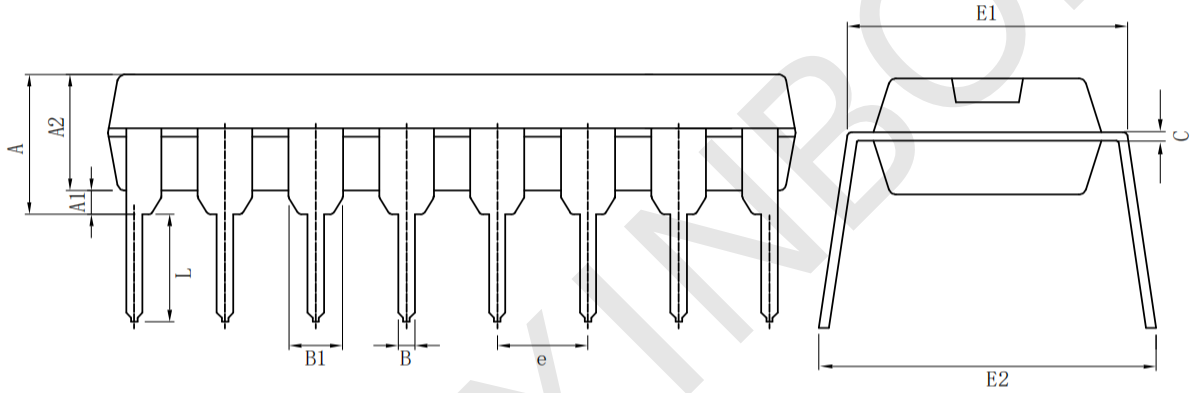

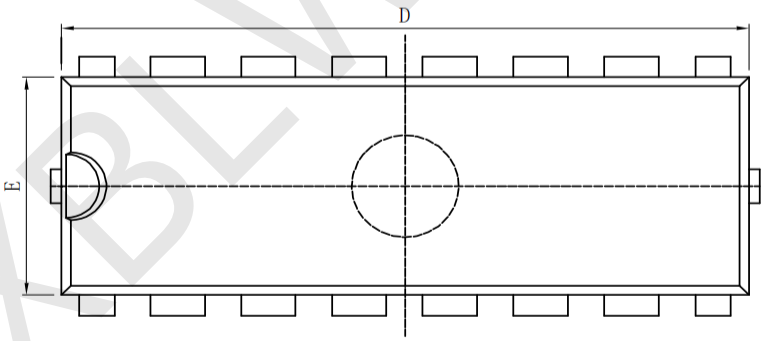

XBLW/XINBOLE

· SOP-16

Size / Symbol	Dimensions In Millimeters			Size / Symbol	Dimensions In Inches		
	Min(mm)	Nom(mm)	Max(mm)		Min(in)	Nom(in)	Max(in)
A	1.500	1.600	1.700	A	0.059	0.063	0.067
A1	0.100	0.150	0.250	A1	0.004	0.006	0.010
A2	1.400	1.450	1.500	A2	0.055	0.057	0.059
A3	0.600	0.650	0.700	A3	0.024	0.026	0.028
b	0.300	0.400	0.500	b	0.012	0.016	0.020
c	0.150	0.200	0.250	c	0.006	0.008	0.010
D	9.800	9.900	10.00	D	0.386	0.390	0.394
E	5.800	6.000	6.200	E	0.228	0.236	0.244
E1	3.850	3.900	3.950	E1	0.152	0.154	0.156
e		1.27(BSC)		e		0.050(BSC)	
L	0.500	0.600	0.700	L	0.020	0.024	0.028
L1		1.05(BSC)		L1		0.041(BSC)	
θ	0°	4°	8°	θ	0°	4°	8°

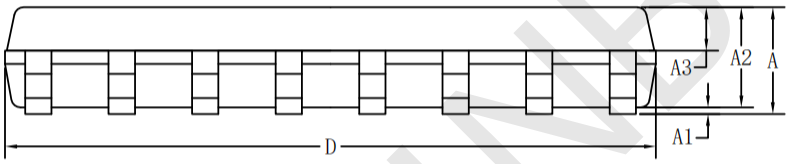

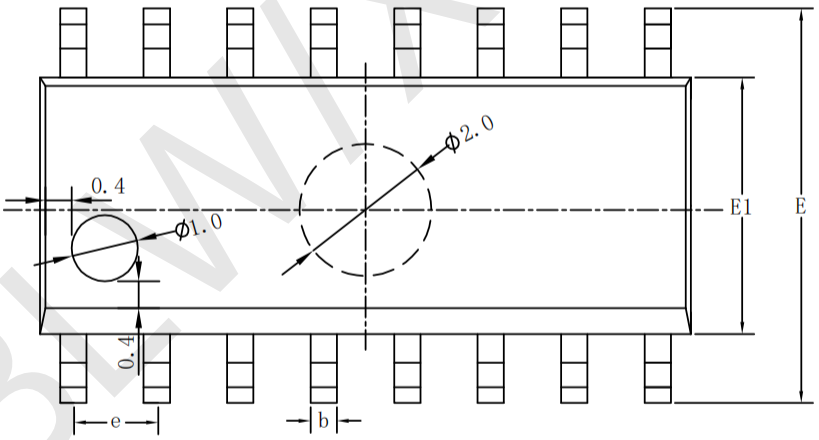

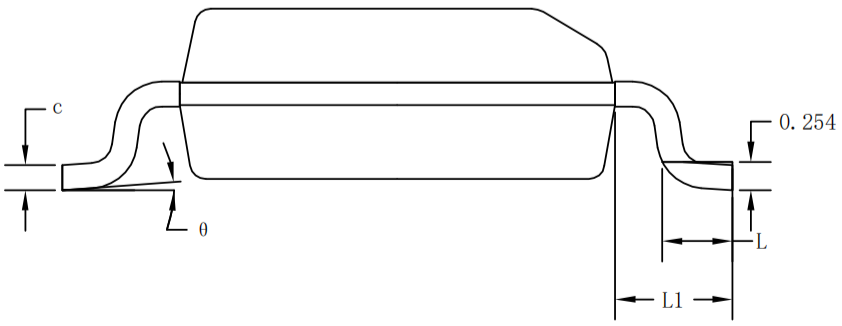

XBLW XINBOLE

Statement:

- XBLW reserves the right to modify the product manual without prior notice! Before placing an order, customers need to confirm whether the obtained information is the latest version and verify the completeness of the relevant information.
- Any semi-guide product is subject to failure or malfunction under specified conditions. It is the buyer's responsibility to comply with safety standards when using XBLW products for system design and whole machine manufacturing. And take the appropriate safety measures to avoid the potential in the risk of loss of personal injury or loss of property situation!
- XBLW products have not been licensed for life support, military, and aerospace applications, and therefore XBLW is not responsible for any consequences arising from the use of this product in these areas.
- If any or all XBLW products (including technical data, services) described or contained in this document are subject to any applicable local export control laws and regulations, they may not be exported without an export license from the relevant authorities in accordance with such laws.
- The specifications of any and all XBLW products described or contained in this document specify the performance, characteristics, and functionality of said products in their standalone state, but do not guarantee the performance, characteristics, and functionality of said products installed in Customer's products or equipment. In order to verify symptoms and conditions that cannot be evaluated in a standalone device, the Customer should ultimately evaluate and test the device installed in the Customer's product device.
- XBLW documentation is only allowed to be copied without any alteration of the content and with the relevant authorization. XBLW assumes no responsibility or liability for altered documents.
- XBLW is committed to becoming the preferred semiconductor brand for customers, and XBLW will strive to provide customers with better performance and better quality products.

XBLW XINBOLE