芯伯乐®
XINBOLE

Product Specification

XBLW LM2901

Quad Voltage Comparators

WEB | www.xinboleic.com



Descriptions

The LM2901 is a quad voltage integrated comparatorsmainly obtained in consumer and industrial electron icsproducts,and designed for use in level detection, low–level sensing.
It is available in DIP14/SOP14/TSSOP14 package.

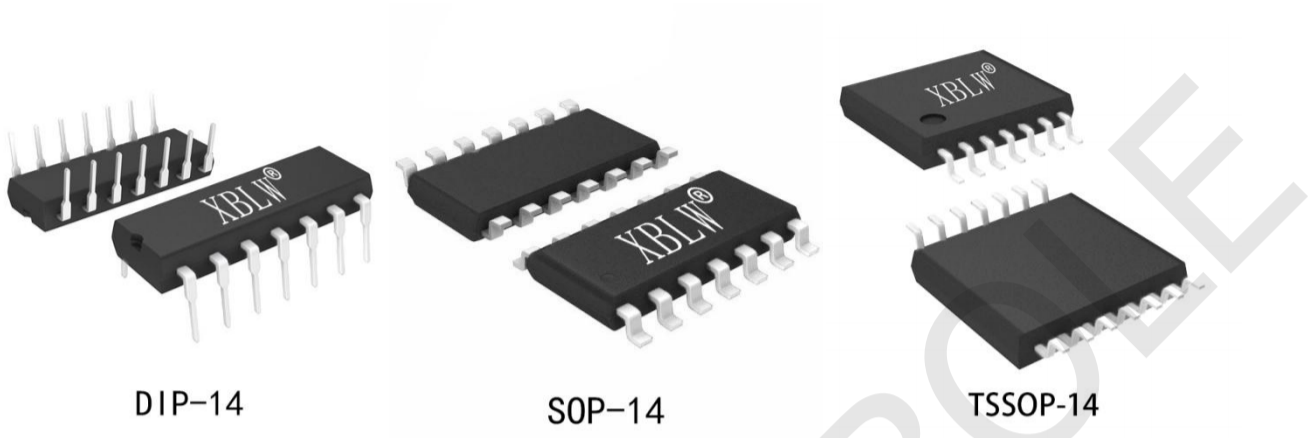

DIP–14 SOP–14 TSSOP-14

Feature

- Wide Supply Voltage Range
  SingleSupplies: 2.0V to 36V
  DualSupplies: ±1.0V to ±18V
- Single or Split Supply Operation
- Low Input Biasing Current:25 nA (Typ)
- Low Input Offset Current:5.0 nA (Typ)
- Low Output Saturation Voltage: 130 mV (Typ)
- Output Voltage Compatible With TTL,CMOS Logic Systems

Applications

- Vacuum robot
- Single phase UPS
- Server PSU
- Cordless power tool
- Wireless infrastructure
- Applicances
- Building automation
- Factory automation & control
- Motor drives
- Infotainment & cluster

Ordering Information

Product Model	Package Type	Marking	Packing	Packing Qty
XBLW LM2901N	DIP-14	LM2901N	Tube	1000pcs/Box
XBLW LM2901DTR	SOP-14	LM2901	Tape	2500pcs/Reel
XBLW LM2901TDTR	TSSOP-14	LM2901	Tape	3000pcs/Reel

XBLW/XINBOLE

Schematic Diagram

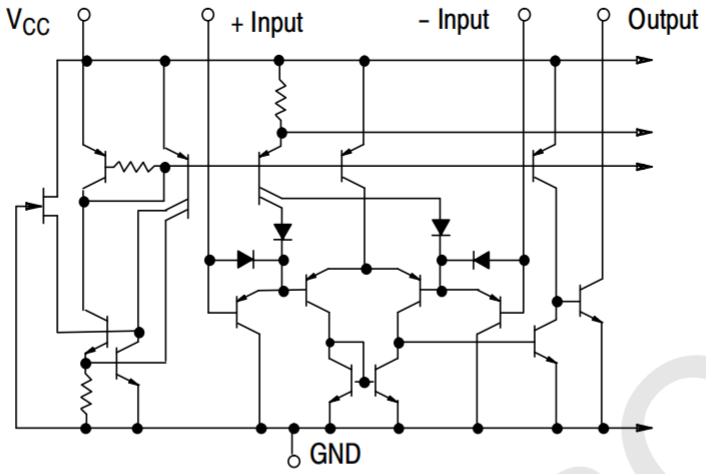

Pin Diagram

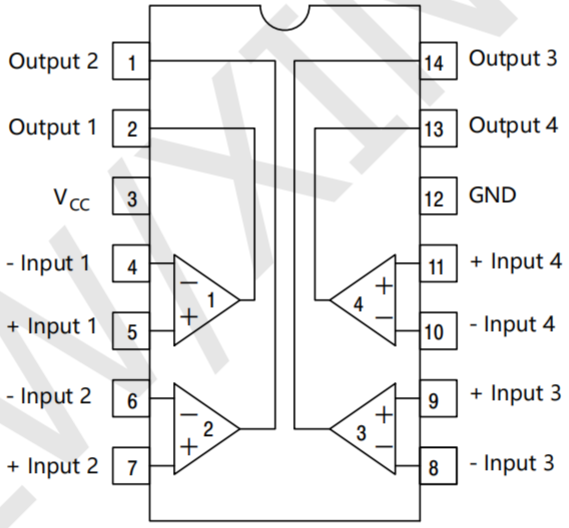

(Top View)

Pins Configurations

No.	Description	Symbol	No.	Description	Symbol
1	OUTPUT 2	OUT2	8	INVERTING INPUT 3	IN3(-)
2	OUTPUT 1	OUT1	9	NONINVERTING INPUT 3	IN3(+)
3	POWER SUPPLY	Vcc	10	INVERTING INPUT 4	IN4(-)
4	INVERTING INPUT 1	IN1(-)	11	NONINVERTING INPUT 4	IN4(+)
5	NONINVERTING INPUT 1	IN1(+)	12	GROUND	GND
6	INVERTING INPUT 2	IN2(-)	13	OUTPUT 4	OUT4
7	NONINVERTING INPUT 2	IN2(+)	14	OUTPUT 3	OUT3

XBLW XINBOLE

Absolute Maximum Ratings

TA=25℃,unless otherwise noted

Parameter	Symbol	Value	Unit
Supply Voltage	Vcc	36 or ±18	V
Input Differential Voltage Range	V_{IDR}	36	V
Input common-mode Voltage Range	V_{ICMR}	-0 3 ~ Vcc	V
Output Current	I_{SC}	50	mA
Power Dissipation(Note *)	P_D	1.0	W
Ambient Temperature	Tamb	-20 ~ 85	℃
Storage Temperature	Tstg	-65 ~ 150	℃

Note *: When used above 25°C, the power consumption decreases by 8mW for every 1°C increase.

Electrical Characteristics

TA=25℃,V_{CC}=5V, unless otherwise noted

Characteristics	Test Conditions	Symbol	Value			Unit
			Min.	Typ.	Max.	
Input Offset Voltage	Ta=25℃	V_{IO}		2.0	7.0	mV
	0℃≤Ta≤70℃				9.0	
Input Offset Current	Ta=25℃	I_{IO}		5.0	50	nA
	0℃≤Ta≤70℃				150	
Input Bias Current	Ta=25℃	I_{IB}		25	250	nA
	0℃≤Ta≤70℃				400	
Input Common Mode Voltage Range	Ta=25℃	V_{ICR}	0		Vcc-1.5	V
	0℃≤Ta≤70℃		0		Vcc-2.0	
Supply Current	R_L=∞	Icc		0.8	2.0	mA
	R_L=∞ Vcc=30V			1.0	2.5	
Voltage Gain	R_L> 15K, Vcc=15V	Gv	50	200		V/ mV
Large Signal Response Time	V_{IN}=TTL Logic Swing , V_{REF}=1.4V , V_{RL}=5.0V , R_L=5. 1K	t_{RES}		300		ns
Response Time	V_{RL}=5.0V , R_L=5. 1K	t_{RES}		1.3		us
Input Differential Voltage		V_{ID}			Vcc	V
Output Sink Current	V_{IN} (-) ≥1.0V, V_{IN} (+) =0V, Vo≤1.5V	I_{SINK}	6.0	16		mA
Output Saturation Voltage	V_{IN} (-) ≥1.0V, V_{IN} (+) =0V, I_{SINK}≤4.0mA	V_{SAT}		130	400	mV
	V_{IN} (-) ≥1.0V, V_{IN} (+) =0V, I_{SINK}≤4.0mA 0℃≤Ta ≤70℃				700	
Output Leakage Current	$V_{IN(+)}$ ≥1.0V , $V_{IN(-)}$ =0V , Vo=5V			0.1		nA
	$V_{IN(+)}$ ≥1.0V , $V_{IN(-)}$ =0V , Vo=30V 0℃≤Ta≤70℃	I_{OL}			1000	

XBLW XINBOLE

Applications

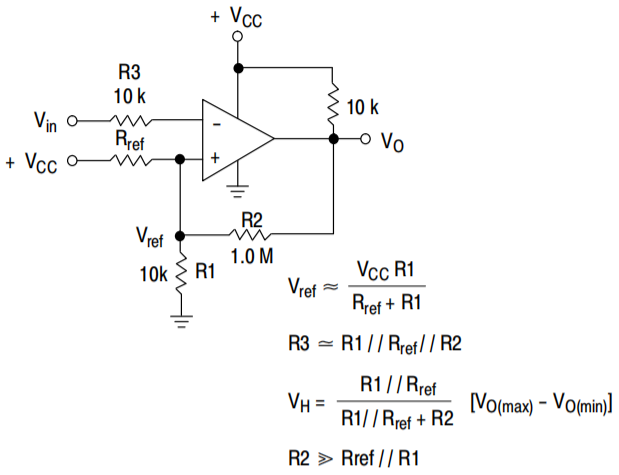

Figure 1. Inverting Comparator with Hysteresis

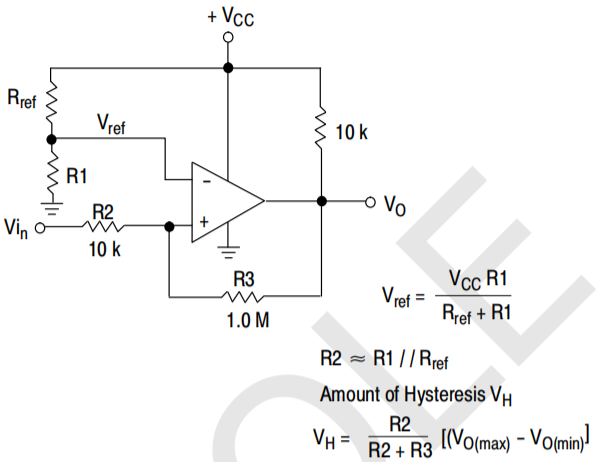

Figure 2. Noninverting Comparator with Hysteresis

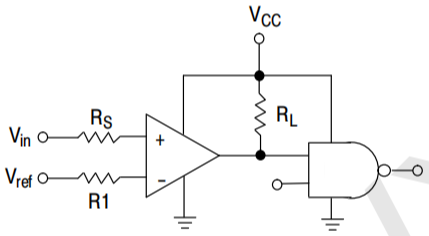

RS = Source Resistance
R1 ≃ RS

Logic	Device	VCC (V)	RL kΩ
CMOS	1/4 MC14001	+15	100
TTL	1/4 MC7400	+5.0	10

Figure 3. Driving Logic

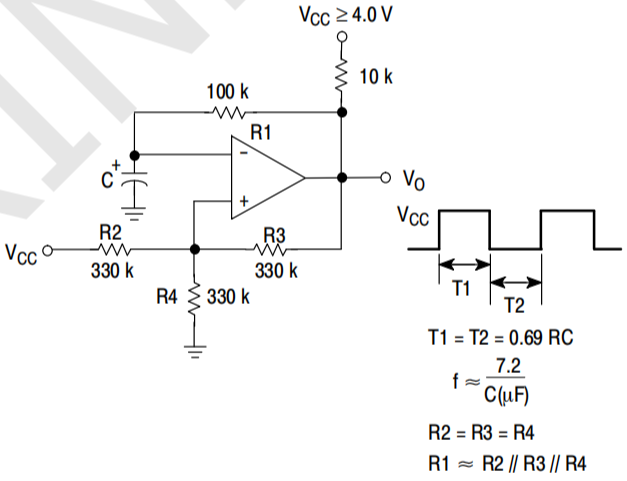

Figure 4. Squarewave Oscillator

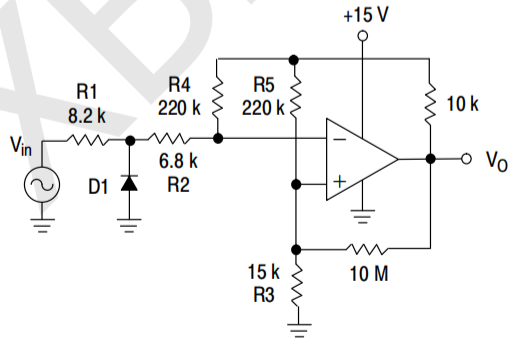

D1 prevents input from going negative by more than 0.6 V.

R1 + R2 = R3

$R3 \leq \frac{R5}{10}$ for small error in zero crossing

Figure 5. Zero Crossing Detector (Single Supply)

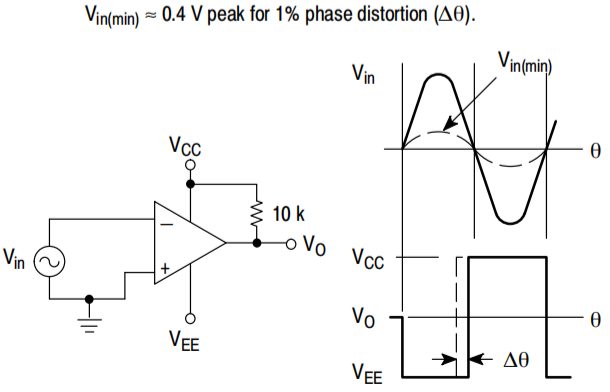

Figure 6. Zero Crossing Detector (Split Supplies)

XBLW / XINBOLE

Typical Characteristics Curves

(V_{CC} = 15 Vdc, T_A = +25°C (each comparator) unless otherwise noted.)

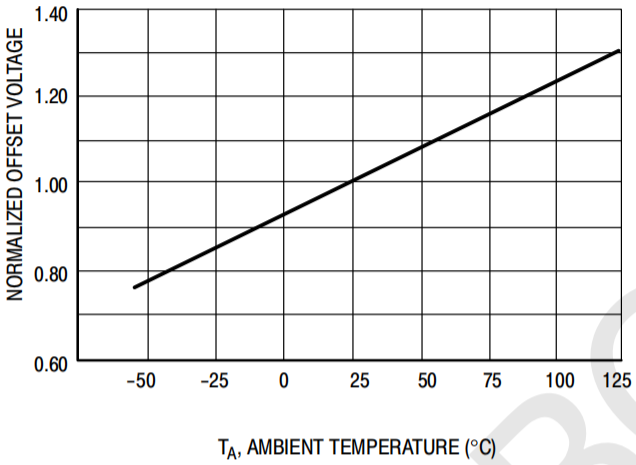

Figure 7. Normalized Input Offset Voltage

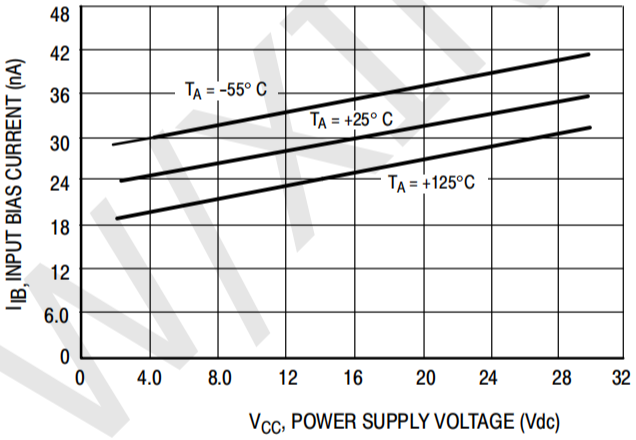

Figure 8. Input Bias Current

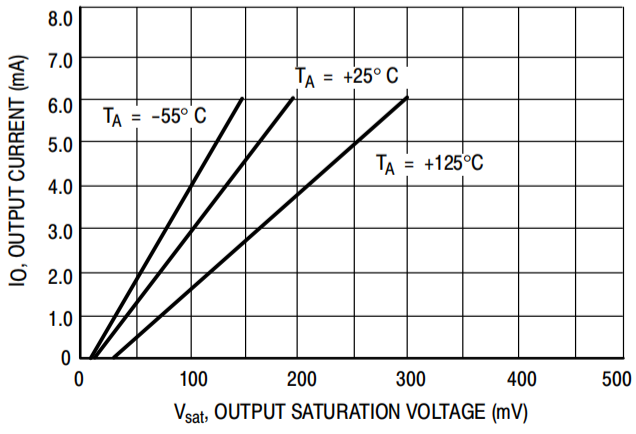

Figure 9. Output Sink Current versus Output Saturation Voltage

XBLW XINBOLE

Package Information

· DIP-14

Size / Symbol	Dimensions In Millimeters		Size / Symbol	Dimensions In Inches	
	Min(mm)	Max(mm)		Min(in)	Max(in)
A	3.710	4.310	A	0.146	0.170
A1	0.510		A1	0.020	
A2	3.200	3.600	A2	0.126	0.142
B	0.380	0.570	B	0.015	0.022
B1	1.524(BSC)		B1	0.060(BSC)	
C	0.204	0.360	C	0.008	0.014
D	18.800	19.200	D	0.740	0.756
E	6.200	6.600	E	0.244	0.260
E1	7.320	7.920	E1	0.288	0.312
e	2.540(BSC)		e	0.100(BSC)	
L	3.000	3.600	L	0.118	0.142
E2	8.400	9.000	E2	0.331	0.354

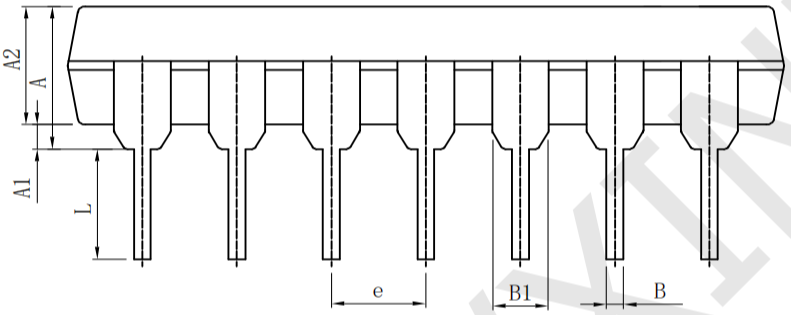

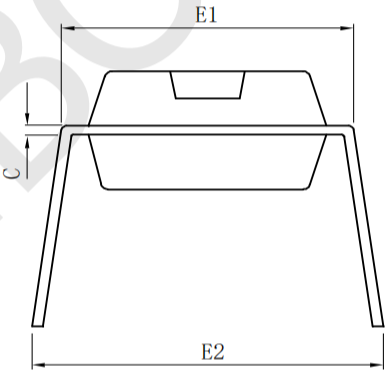

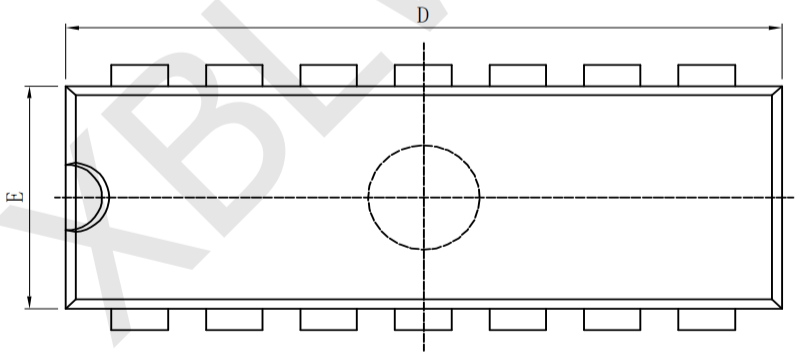

XBLW/XINBOLE

· SOP-14

Size / Symbol	Dimensions In Millimeters		Size / Symbol	Dimensions In Inches	
	Min(mm)	Max(mm)		Min(in)	Max(in)
A	1.350	1.750	A	0.050	0.068
A1	0.100	0.250	A1	0.004	0.009
A2	1.100	1.650	A2	0.040	0.060
B	0.330	0.510	B	0.010	0.020
C	0.190	0.250	C	0.007	0.009
D	8.550	8.750	D	0.330	0.340
E	3.800	4.000	E	0.150	0.150
e	1.27		e	0.05	
H	5.800	6.200	H	0.220	0.240
h	0.250	0.500	h	0.009	0.020
L	0.400	1.270	L	0.015	0.050
k	8° (max)		k	8° (max)	

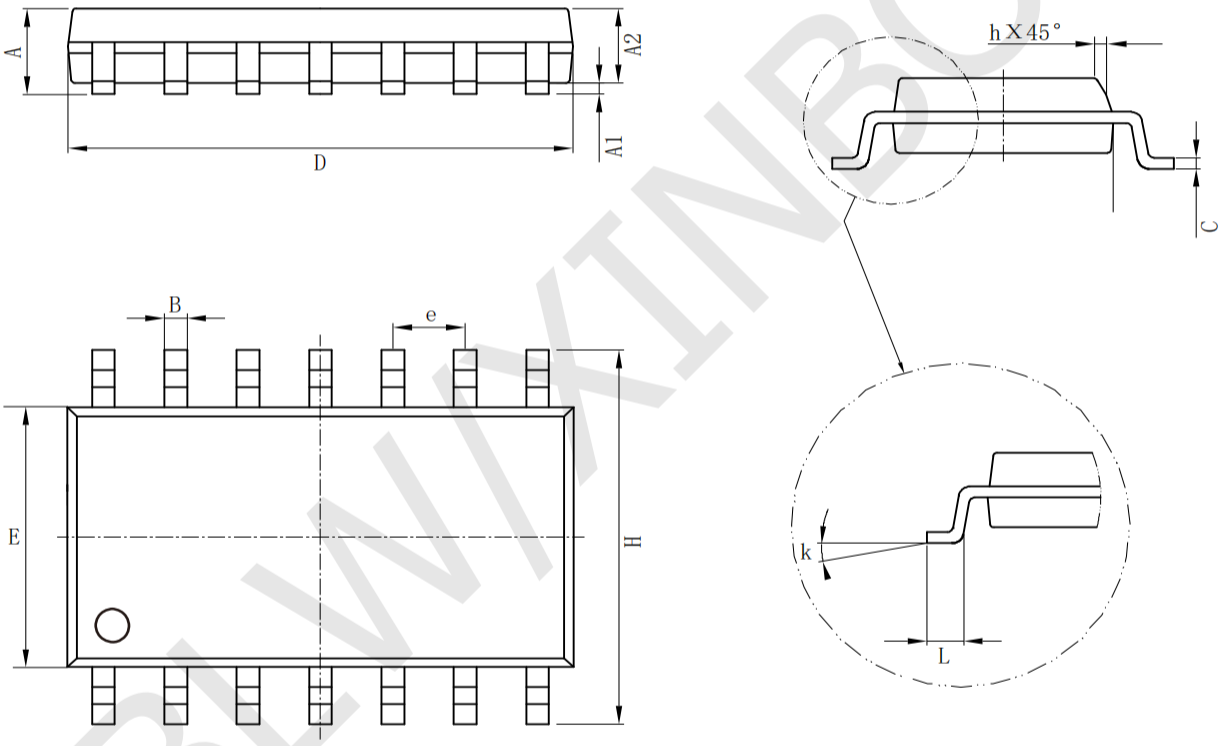

XBLW/XINBOLE

· TSSOP-14

Size / Symbol	Dimensions In Millimeters		Size / Symbol	Dimensions In Inches	
	Min(mm)	Max(mm)		Min(in)	Max(in)
A		1.200	A		0.047
A1	0.050	0.150	A1	0.002	0.006
A2	0.800	1.050	A2	0.031	0.041
b	0.190	0.300	b	0.007	0.012
c	0.090	0.200	c	0.004	0.0089
D	4.900	5.100	D	0.193	0.201
E	6.200	6.600	E	0.244	0.260
E1	4.300	4.500	E1	0.169	0.176
e	0.65		e	0.0256	
L	0.450	0.750	L	0.018	0.030
L1	1.00		L1	0.039	
k	0°	8°	k	0°	8°

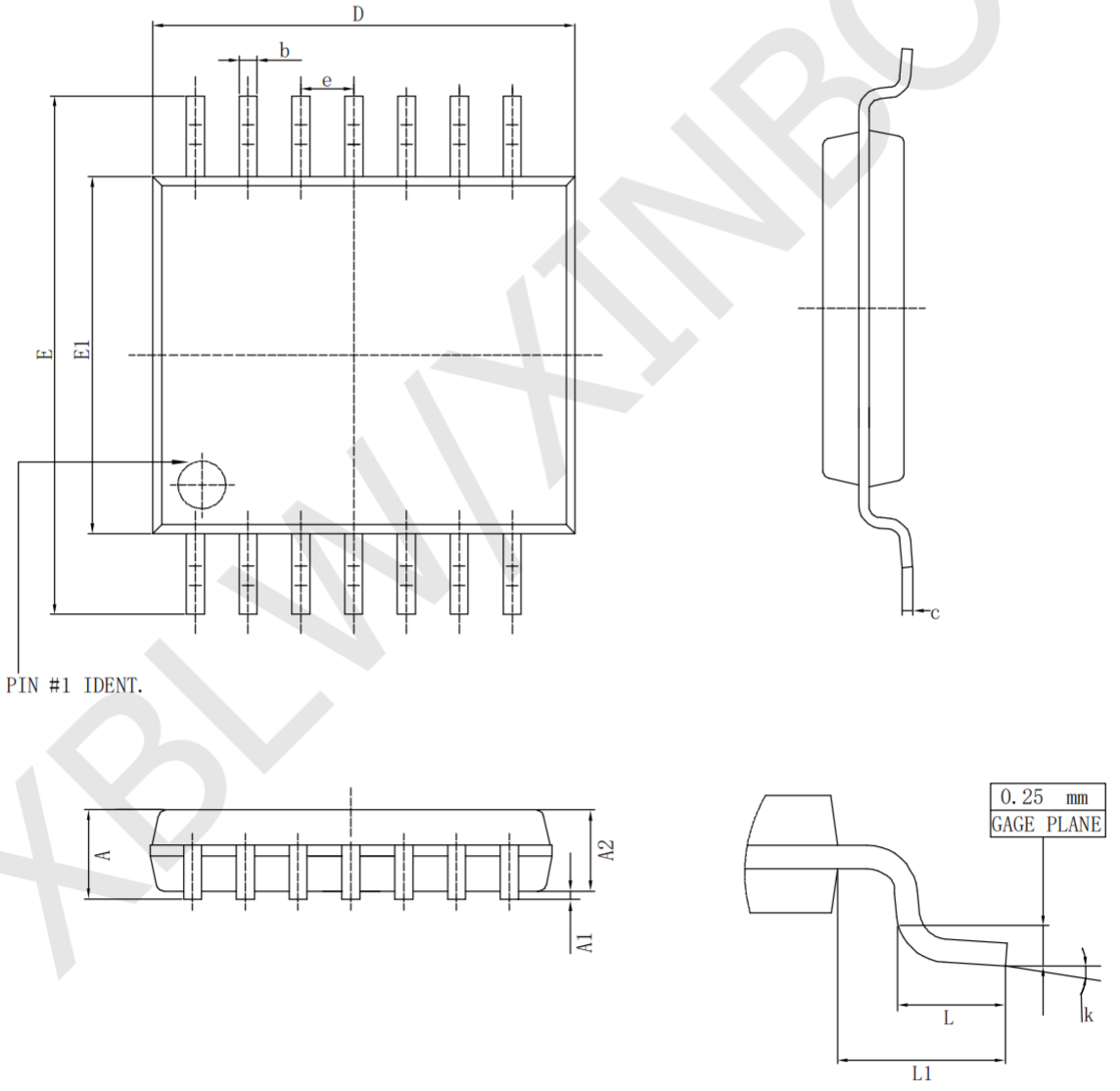

XBLW/XINBOLE

Statement:

- XBLW reserves the right to modify the product manual without prior notice! Before placing an order, customers need to confirm whether the obtained information is the latest version and verify the completeness of the relevant information.
- Any semi-guide product is subject to failure or malfunction under specified conditions. It is the buyer's responsibility to comply with safety standards when using XBLW products for system design and whole machine manufacturing. And take the appropriate safety measures to avoid the potential in the risk of loss of personal injury or loss of property situation!
- XBLW products have not been licensed for life support, military, and aerospace applications, and therefore XBLW is not responsible for any consequences arising from the use of this product in these areas.
- If any or all XBLW products (including technical data, services) described or contained in this document are subject to any applicable local export control laws and regulations, they may not be exported without an export license from the relevant authorities in accordance with such laws.
- The specifications of any and all XBLW products described or contained in this document specify the performance, characteristics, and functionality of said products in their standalone state, but do not guarantee the performance, characteristics, and functionality of said products installed in Customer's products or equipment. In order to verify symptoms and conditions that cannot be evaluated in a standalone device, the Customer should ultimately evaluate and test the device installed in the Customer's product device.
- XBLW documentation is only allowed to be copied without any alteration of the content and with the relevant authorization. XBLW assumes no responsibility or liability for altered documents.
- XBLW is committed to becoming the preferred semiconductor brand for customers, and XBLW will strive to provide customers with better performance and better quality products.

XBLW/XINBOLE