芯伯乐®
XINBOLE

Product Specification

XBLV321DTR

1.5MHz, RRIO, CMOS, Op Amps

WEB | www.xinboleic.com



DESCRIPTION

The XBLV321(Single) is low cost, voltage feedback amplifiers. These devices can operate from 2.1V to 5.5V single supply, and consume only 65μA quiescent current per amplifier. They provide rail-to-rail input with a wide input common mode voltage range and rail-to-rail output voltage swing. This feature makes XBLV321 appropriate for buffering ASIC.

The XBLV321 offer a gain-bandwidth product of 1.5MHz and an ultra-low input bias current of 10pA. They are well suited for piezoelectric sensors, integrators and photo diode amplifiers.

The XBLV321 is designed into a wide range of applications, such as portable systems, safety monitoring, battery-powered instrumentation, and portable systems.

FEATURES

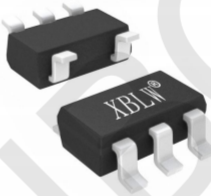

SOT23-5

- Low Cost
- Supply Voltage Range: 2.1V to 5.5V
- Low Supply Current : 65μA/Amp (TYP)
- Low Offset Voltage: ±0.8mV (TYP)
- Unity-Gain Stable
- Gain-Bandwidth Product : 1.5MHz (TYP)
- Slew Rate: 0.6V/μs (TYP)
- Rail-to-Rail Input and Output
- Input Voltage Range: -0.1V to 5.6V with V_S = 5.5V
- Operating Temperature: -40°C~+125°C

APPLICATIONS

- Active filter
- Electronic instrumentation
- General Purpose Portable Devices
- General Purpose Low Voltage

Ordering Information

Product Model	Package Type	Marking	Packing	Packing Qty
XBLV321DTR	SOT23-5	V321	Tape	3000Pcs/Reel

XBLW/XINBOLE

Pin Configuration

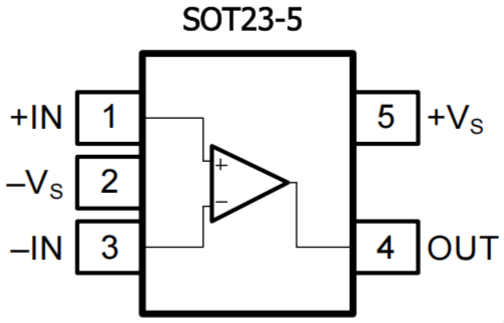

XBLV321

Absolute Maximum Ratings

Over operating free-air temperature range (unless otherwise noted)

PARAMETER	MIN	MAX	UNIT
Power Supply Voltage(V+ to V-)	2.1	6	V
Differential Input Voltage		±5.5	V
Common mode Input Voltage	-0.3	VCC+0.3V	V
Maximum Junction Temperature		+150	℃
Storage Temperature Range	-65	+150	℃
Lead Temperature(Soldering, 10 sec)		260	℃

Stresses beyond those listed under Absolute Maximum Ratings may cause permanent damage to the device. Exposure to any Absolute Maximum Rating condition for extended periods may affect device reliability and lifetime.

Recommended Operating Conditions

Over operating free-air temperature range (unless otherwise noted)

	MIN	TYP	MAX	UNIT
Supply Voltage, Vs=(V+) - (V-)	2.1		5.5	V
Operating Temperature Range	-40	25	+125	℃

XBLW/XINBOLE

ELECTRICAL CHARACTERISTICS

(V+=5V T_A = 25°C unless otherwise noted)

PARAMETER	SYMBOL	CONDITIONS	SPEC			
			MIN	TYP	MAX	UNIT
Input offset voltage	V_{IO}		-	±0.8	±5	mV
Input offset current	I_{IO}		-	±10	-	pA
Input bias current	I_{BIAS}		-	±10	-	pA
Input Common Mode Voltage	V_{ICM}	V+=5.5V	-0.1	-	5.6	V
Quiescent Current/Amplifier	I_Q			65		μA
Output short-circuit current	I_{SC}		-	60	-	mA
Large Signal Voltage Gain	Gv	RL=5KΩ, Vo=0.1 to 4.9V	70	90	-	dB
		R_L=100KΩ, Vo=0.035 to 4.965V	80	94	-	dB
Common Mode Rejection Ratio	CMRR	V+=5.5V, V_{ICM}=-0.1 to 4V	62	90	-	dB
		V+=5.5V, V_{ICM}=-0.1 to 5.6V	56	88	-	dB
Power supply Rejection Ratio	PSRR	V+=2.5V to 5.5V, V_{ICM}=0.5V	60	80	-	dB
Output Swing	V_{OH}	RL=10KΩ	V+ - 0.1	V+-0.01	-	V
	V_{OL}		-	10	-	mV
Gain-Bandwidth Product	GBWP		-	1.5	-	MHz
Slew Rate	SR		-	0.6	-	V/us

TYPICAL APPLICATIONS

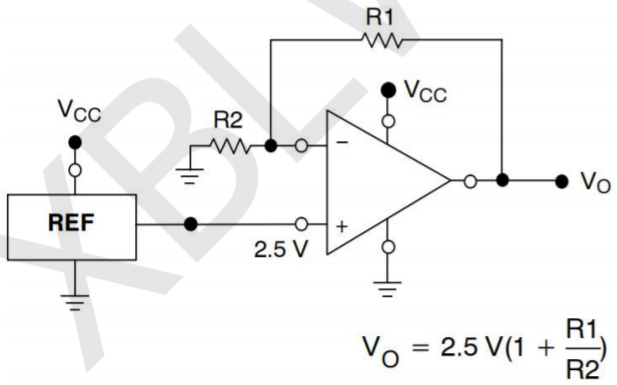

Figure 1. Reference Voltage

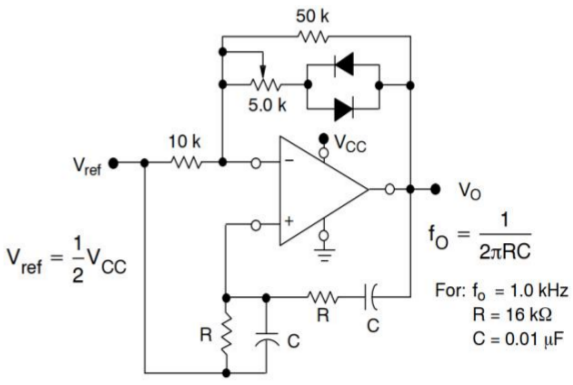

Figure 2. Wien Bridge Oscillator

XBLW/XINBOLE

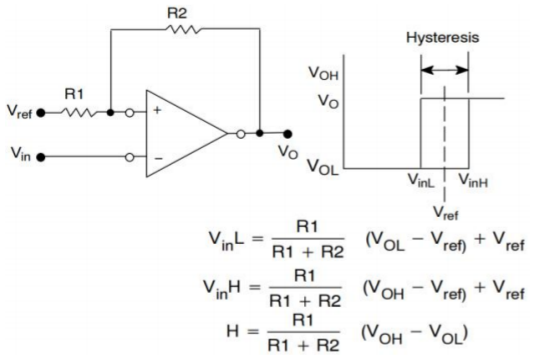

Figure 3. Lag Comparator

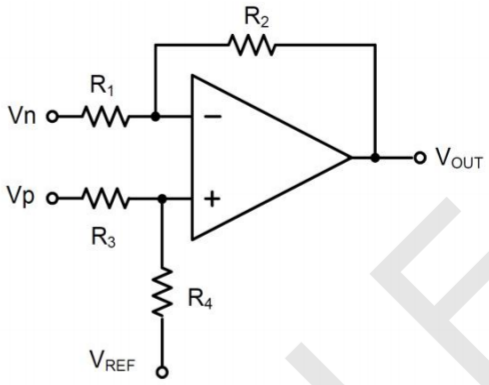

Figure 4. Differential Amplifier

TYPICAL CHARACTERISTICS

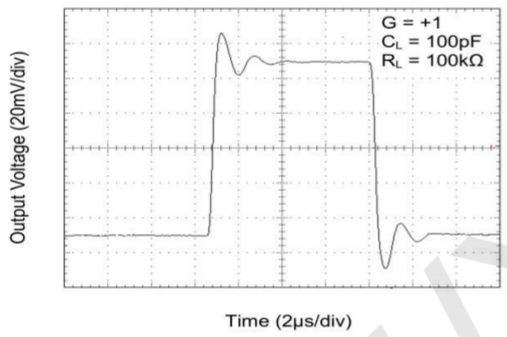

Figure 5. Small-Signal Step Response

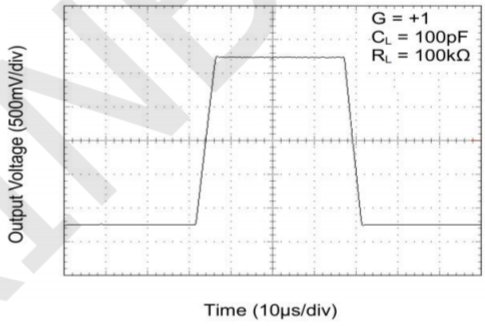

Figure 6. Large-Signal Step Response

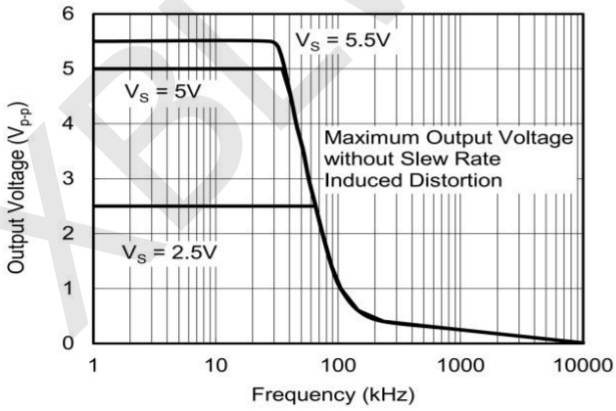

Figure 7. Maximum Output Voltage vs. Frequency

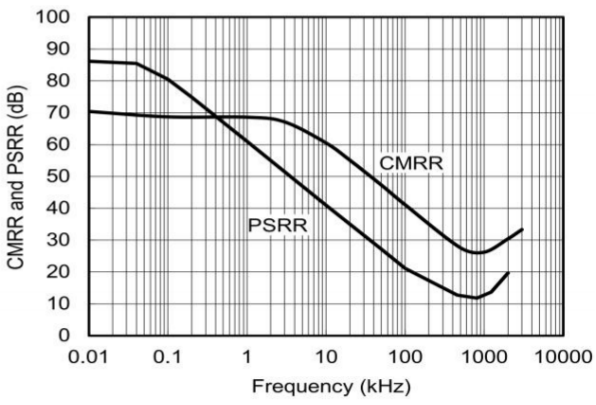

Figure 8. CMRR & PSRR vs. Frequency

Package Information

• SOT23-5

SIZE / SYMBOL	Dimensions In Millimeters		SIZE / SYMBOL	Dimensions In Inches	
	MIN(mm)	MAX(mm)		MIN(in)	MAX(in)
A	1.050	1.250	A	0.041	0.049
A1	0.000	0.100	A1	0.000	0.004
A2	1.050	1.150	A2	0.041	0.045
b	0.300	0.500	b	0.012	0.020
c	0.100	0.200	c	0.004	0.008
D	2.820	3.020	D	0.111	0.119
E	1.500	1.700	E	0.059	0.067
E1	2.650	2.950	E1	0.104	0.116
e	0.95(BSC)		e	0.037(BSC)	
e1	1.800	2.000	e1	0.071	0.079
L	0.300	0.600	L	0.012	0.024
θ	0°	8°	θ	0°	8°

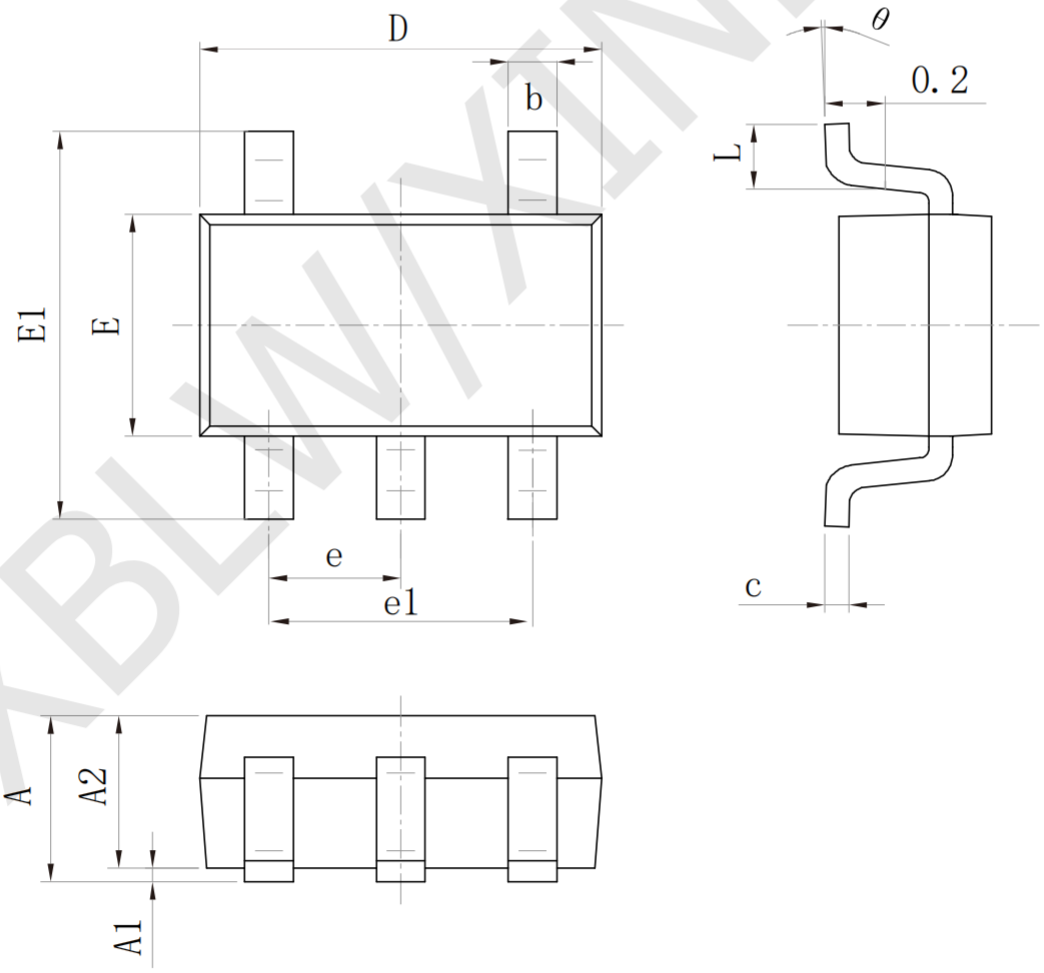

XBLW/XINBOLE

Statement:

- XBLW reserves the right to modify the product manual without prior notice! Before placing an order, customers need to confirm whether the obtained information is the latest version and verify the completeness of the relevant information.
- Any semiconductor product may malfunction under specified conditions. When using XBLW products for system design and overall manufacturing, the buyer is responsible for complying with safety standards and taking appropriate safety measures to avoid risks that may cause personal injury or property damage.
- XBLW products have not been licensed for life support, military, and aerospace applications, and therefore XBLW is not responsible for any consequences arising from the use of this product in these areas.
- If any or all XBLW products (including technical data, services) described or contained in this document are subject to any applicable local export control laws and regulations, they may not be exported without an export license from the relevant authorities in accordance with such laws.
- The specifications of any and all XBLW products described or contained in this document specify the performance, characteristics, and functionality of said products in their standalone state, but do not guarantee the performance, characteristics, and functionality of said products installed in Customer's products or equipment. In order to verify symptoms and conditions that cannot be evaluated in a standalone device, the Customer should ultimately evaluate and test the device installed in the Customer's product device.
- XBLW documentation is only allowed to be copied without any alteration of the content and with the relevant authorization. XBLW assumes no responsibility or liability for altered documents.
- XBLW is committed to becoming the preferred semiconductor brand for customers, and XBLW will strive to provide customers with better performance and better quality products.

XBLW/XINBOLE